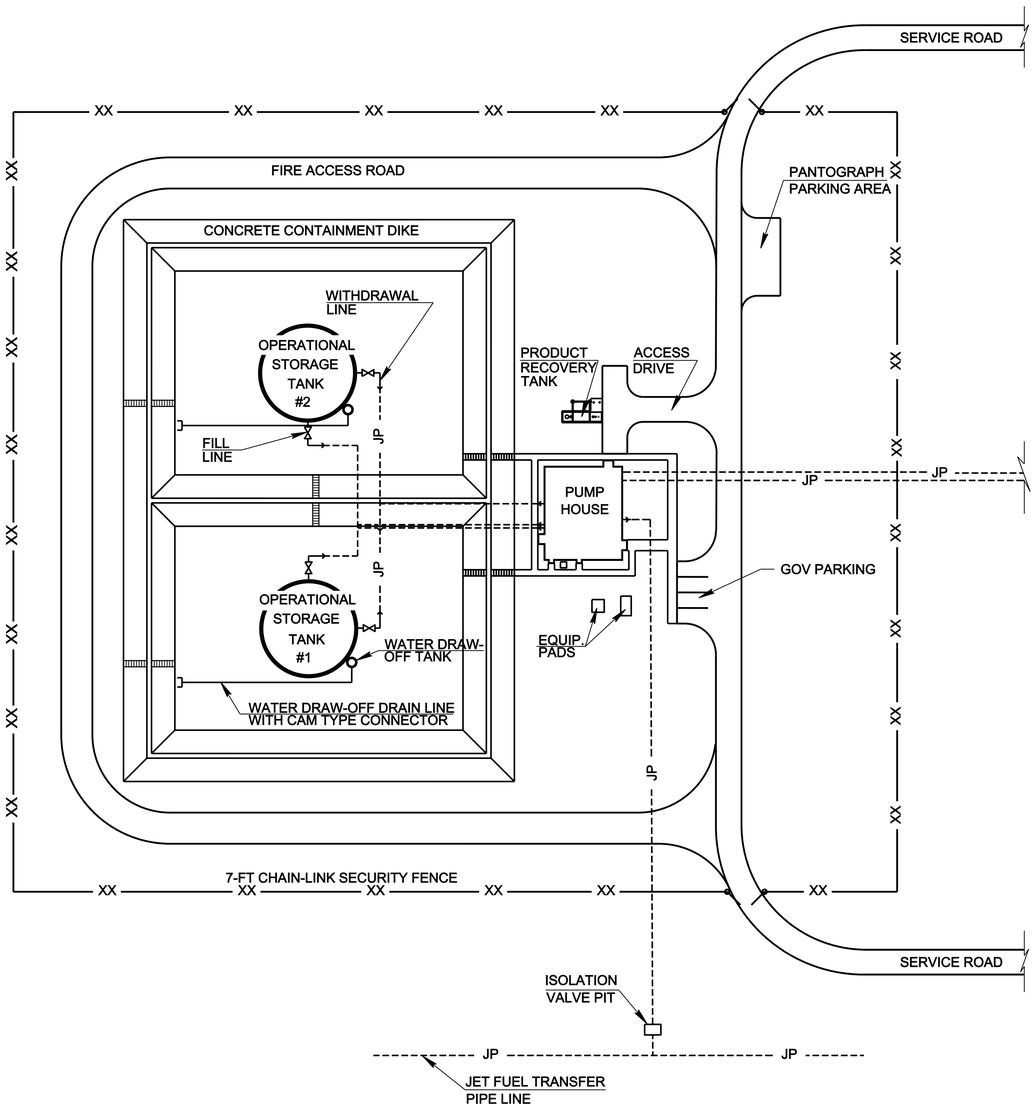

TYPICAL TYPE IV SYSTEM SITE PLAN

SCALE: 1 INCH = 50 FEET
50' 0 50'

NOTES TO DESIGNER:

1. PROVIDE APPROPRIATE ENVIRONMENTAL MONITORING SYSTEM AS REQUIRED BY FEDERAL, STATE AND LOCAL REGULATIONS.
2. ALL UNDERGROUND PIPING SHALL BE SHOWN BOTH IN PLAN AND IN PROFILE. SEE SHEET MS-201 FOR TYPICAL PROFILE.
3. VERIFY WATER FOR FIRE PROTECTION AROUND THE RAMPS, TANKS AND PUMP HOUSE MEET THE REQUIREMENTS AS LISTED IN UFC 3-600-01.
4. CONTAINMENT AREA DIKE CONFIGURATION SHALL MEET THE REQUIREMENTS OF UFC 3-460-01. SEE AST STANDARD DESIGN FOR ADDITIONAL INFORMATION.
5. PROVIDE PANTOGRAPH PARKING AREA AS INDICATED ON DRAWINGS, SIZE AS DESIGNATED BY THE COMMAND FUEL FACILITIES ENGINEER. PANTOGRAPHS SHALL BE SHELTERED IN ACCORDANCE WITH MANUFACTURERS RECOMMENDATIONS.
6. CONTAINMENT AREA AT HYDRANT HOSE TRUCK CHECK-OUT STATION/PANTOGRAPH FLUSHING CONNECTION SHALL BE SIZED TO CONTAIN COMPLETE FUEL SPILL OF ONE HYDRANT HOSE TRUCK AND SHALL BE IN ACCORDANCE WITH LATEST FEDERAL, STATE AND LOCAL REGULATIONS AND MEET THE REQUIREMENTS OF UFC 3-460-01.
7. SEE AST STANDARD DESIGN AND UFC 3-460-01 FOR AST DESIGN REQUIREMENTS.
8. SEE TYPE III STANDARD FOR ADDITIONAL DETAILS.

SUPPLEMENTAL LEGEND

— JP — JET FUEL LINE

—XX— 7 FOOT CHAIN LINK FENCE W/ 3-STRAND BARBED WIRE

US ARMY CORPS OF ENGINEERS
OMAHA DISTRICT

MARK	DESCRIPTION	DATE	APPR.

MARK	DESCRIPTION	DATE	APPR.

U. S. ARMY ENGINEER DISTRICT
CORPS OF ENGINEERS
OMAHA DISTRICT

DESIGNED BY: C.S.L./R.L.C.
DWN BY: R.L.C.
CKD BY: M.M.B.
SUBMITTED BY: J.J.H.
FILE NAME:
SIZE: 33.1X22
PLOT SCALE: 1.00 / in.
DATE: JULY 2010
SOLICITATION NO.: Y
CONTRACT NO.: Y
FILE NUMBER: OD38-C-301.DWG
PLOT DATE: 6/28/2010

DOD, STANDARDS
PRESSURIZED HYDRANT DIRECT FUELING SYSTEM

TYPICAL TYPE IV SYSTEM SITE PLAN

SHEET IDENTIFICATION NUMBER
CS101

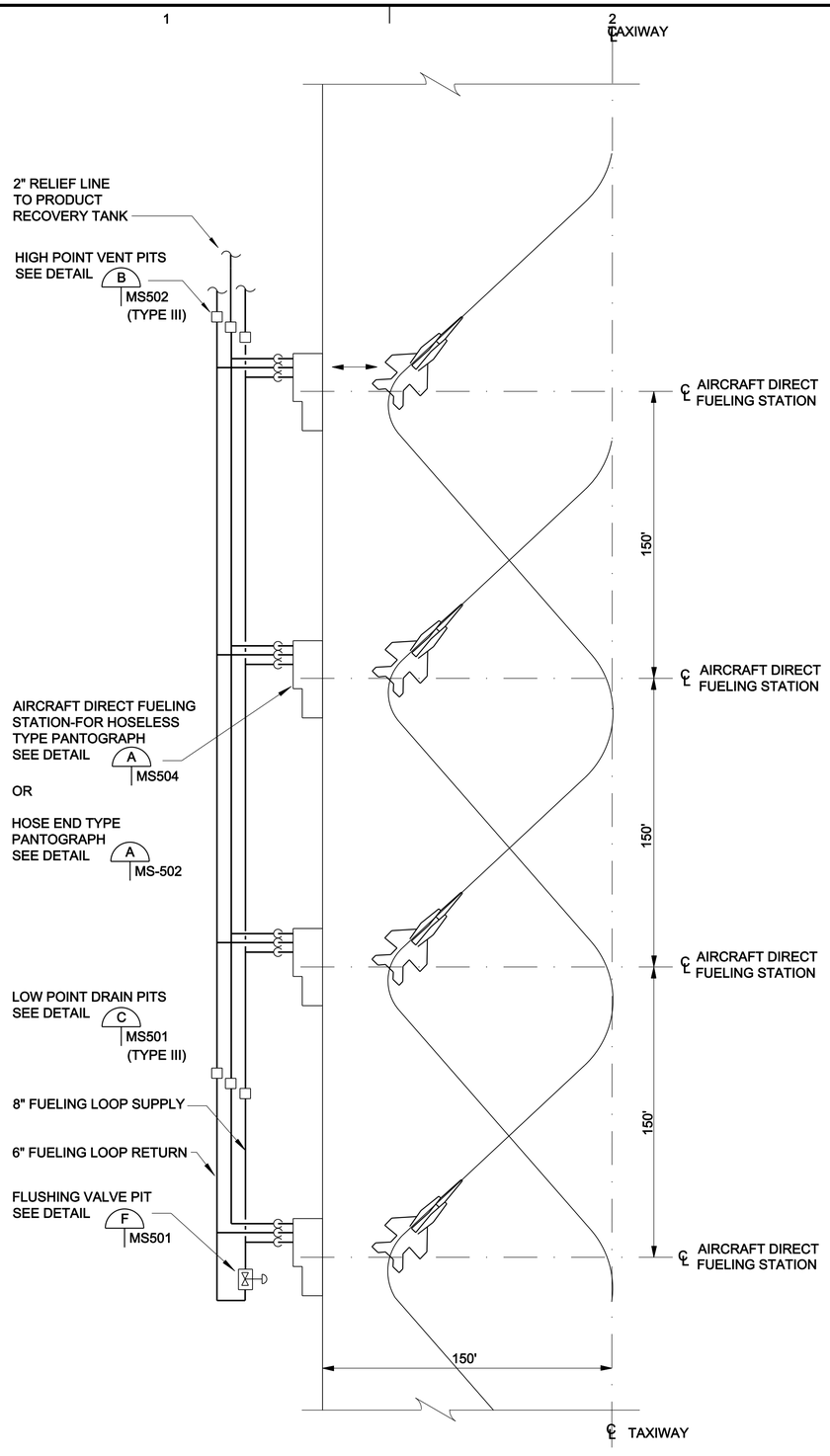

TYPICAL EDGE OF APRON OR DIAGONAL TO TAXIWAY ARRANGMENT

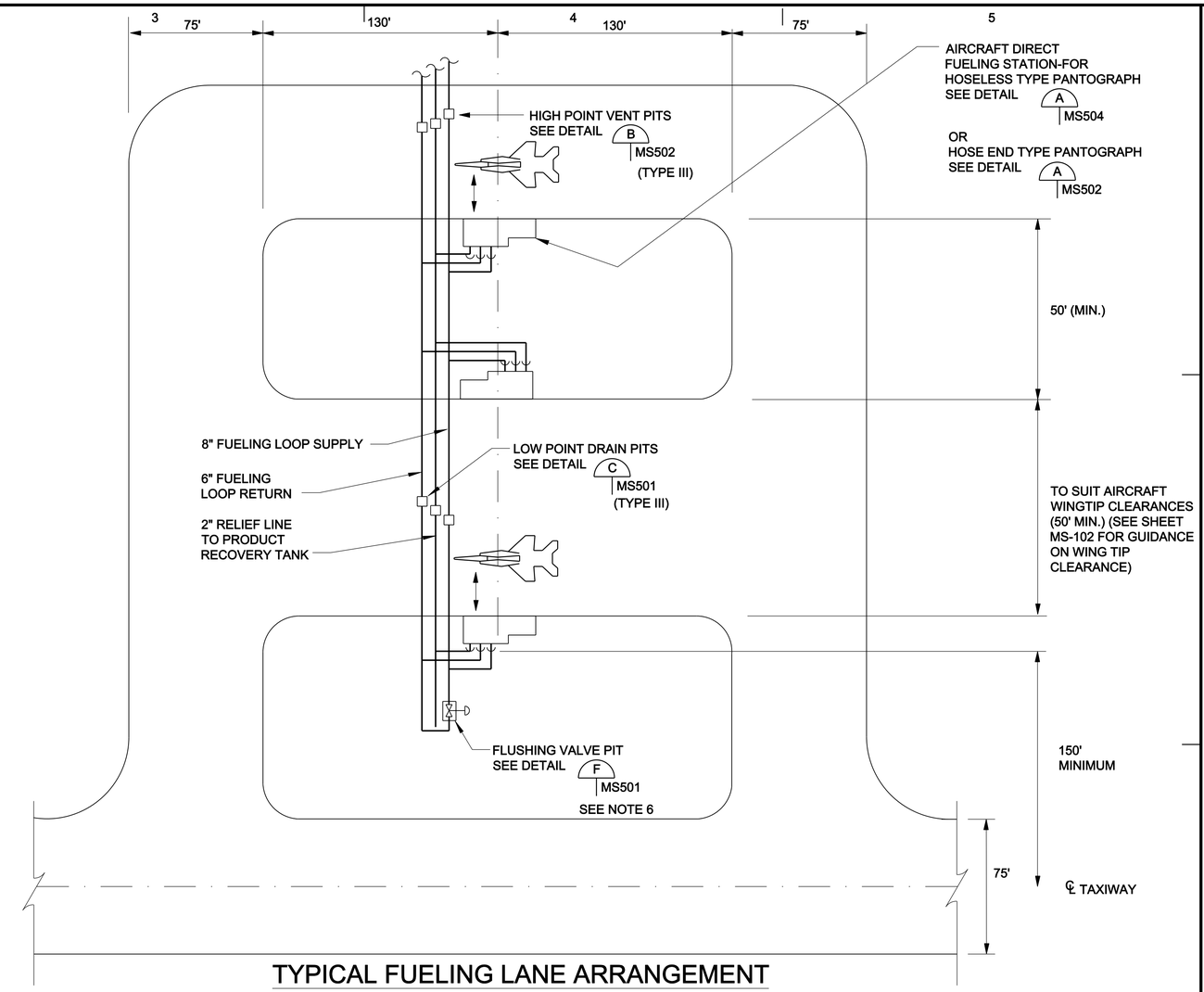

TYPICAL FUELING LANE ARRANGEMENT

TYPICAL LOCATION OF AIRCRAFT FUELING POINTS

LEFT SIDE	RIGHT SIDE
AV - 8B	F - 18
F - 16	F - 6
* F - 15	EA - 6B
F - 22	AH - 1
F - 35	H - 1
T - 45	F117A
H - 60	
H - 53	
H - 46	
V - 22	

* SHOWN

NOTES TO DESIGNER:

1. RELATIVE SPACING AIRCRAFT TO AIRCRAFT DIRECT FUELING STATION SHALL BE DESIGNATED BY THE COMMAND FUEL FACILITIES ENGINEER.

2. ALL UNDERGROUND PIPING SHALL BE SHOWN BOTH IN PLAN AND IN PROFILE. SEE SHEET 4 FOR TYPICAL PROFILE.

3. PROVIDE FIRE PROTECTION AROUND RAMP AS REQUIRED BY COMMAND SERVICE HEADQUARTERS, STATE, FEDERAL AND LOCAL REGULATIONS.

4. CLEARANCE FROM AIRCRAFT DIRECT FUELING STATION TO INHABITED BUILDINGS TO BE MINIMUM OF 200 FEET. CLEARANCES OTHER THAN THOSE SHOWN SHALL CONFORM TO DM-21, UFC 3-460-1.

5. ABOVEGROUND REFUELING HARDWARE AND PARKED AIRCRAFT SHOULD BE LOCATED SO THAT IT DOES NOT VIOLATE THE PRIMARY SURFACE OR THE TRANSITION SURFACE OF A RUNWAY, THE 100 FEET CLEARANCE FOR A PARKING APRON OR THE 150 FEET CLEARANCE FOR ANY TAXIWAY NOT SPECIFICALLY DEDICATED AS A REFUELING LANE. THE REFUELING AREA SHOULD BE LOCATED SO THAT NO PART OF AN AIRCRAFT RECEIVING FUEL VIOLATES ANY OF THE ABOVE CLEARANCE AREAS. SEE NAVFAC P80.3. DESIGNER TO CONTACT MAJCOM FOR SPECIFIC GUIDANCE.

6. ADD 6" PANTOGRAPH FLUSH LINE AND DELETE FLUSH VALVE PIT IF PANTOGRAPH FLUSH LINE OPTION IS USED.

7. NAVY/MARINE CORPS SPECIFIC NOTES:

A. FUELING LANE WIDTH, W(MIN.) SHOULD BE CONFIRMED WITH EFD AIRFIELD PLANNING SPECIALIST.

B. 75' (MIN.) FUELING TAXIWAY-CLASS B RUNWAY; 40' (MIN.) FUELING TAXIWAY-CLASS A RUNWAY.

C. FOR PATROL, LARGE GENERAL PURPOSE AND TRANSPORT, OR SPECIAL MISSION AIRCRAFT, CONCEPT ARRANGEMENTS STILL APPLY; HOWEVER, CONSULT YOUR AIRFIELD PLANNING SPECIALIST FOR NAVAIR HEADQUARTERS FOR SPACING OF AIRCRAFT DIRECT FUELING STATIONS.

40' 20' 0 40'

SCALE: 1" = 40'-0"

US ARMY CORPS OF ENGINEERS
OMAHA DISTRICT

MARK	DESCRIPTION	DATE	APPR.

MARK	DESCRIPTION	DATE	APPR.

DESIGNED BY: JOSEPH J. PESEK
DATE: JULY 2010
DWN BY: T.D.F.
CKD BY: C.R.M.
SOLICITATION NO.: X
SUBMITTED BY: SCOTT A. SMITH
CONTRACT NO.: X
FILE NAME:
FILE NUMBER: X
SIZE: 33.1X22
PLOT SCALE:
PLOT DATE:

U. S. ARMY ENGINEER DISTRICT
CORPS OF ENGINEERS
OMAHA DISTRICT

DOD STANDARDS
PRESSURIZED HYDRANT DIRECT FUELING SYSTEM

TYPICAL APRON / TAXI LANE ARRANGEMENT
SHEET 1 OF 2

SHEET IDENTIFICATION NUMBER
MS101

I:\dwgs\mech\OD38\MS101.dwg
gBedctdf

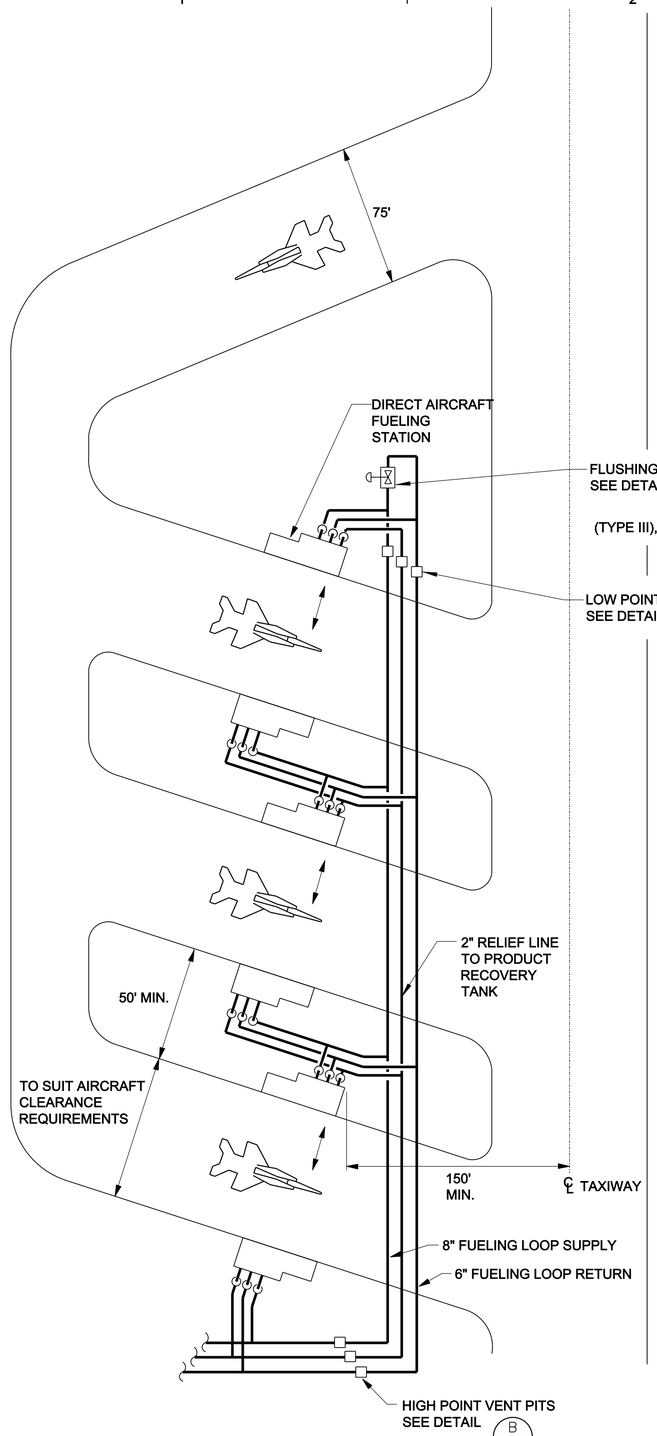

SINGLE LANE-ONE WAY-EITHER DIRECTION. FUEL EITHER SIDE ARRANGEMENT

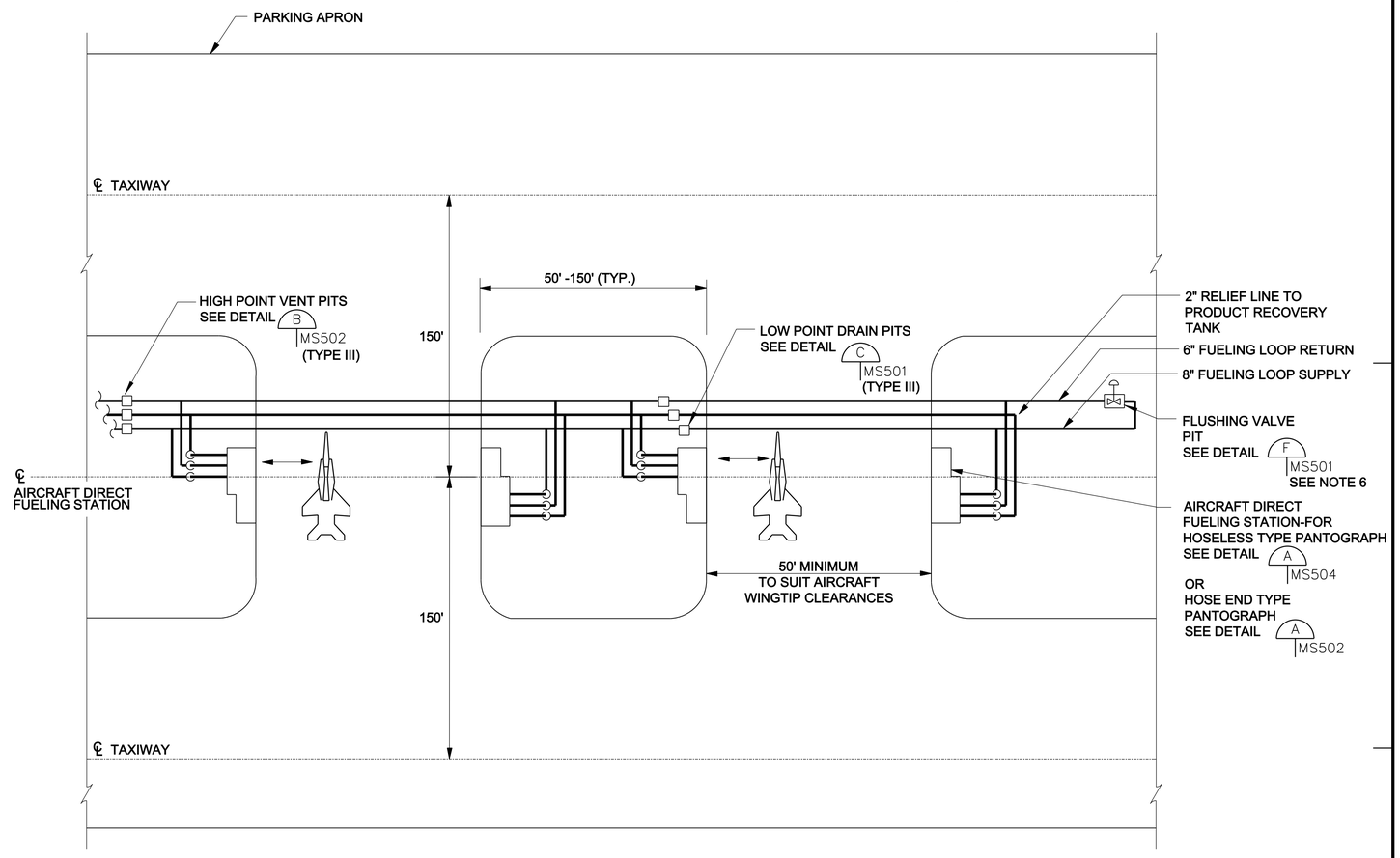

TYPICAL FUELING LANES BETWEEN TAXIWAY AND PARKING APRON

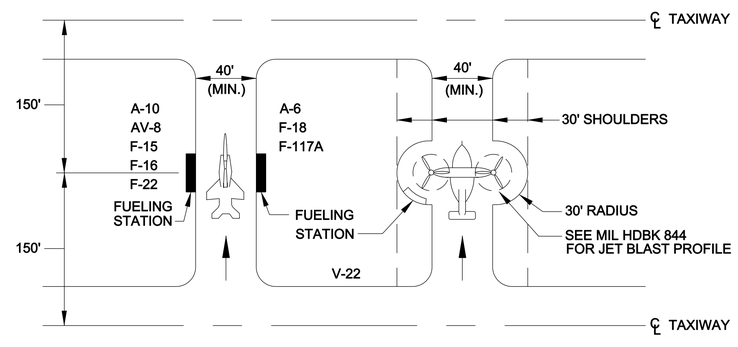

NOTE:
LOCATE FUELING STATIONS ON THE FUELING ADAPTOR SIDE OF THE AIRCRAFT AS FOLLOWS.

LEFT SIDE	RIGHT SIDE
A - 7	A - 6
A - 10	F - 4
AV - 8	F - 14
F - 15	F - 18
F - 16	F - 117A
F - 22	
V - 22	

TYPICAL AIRCRAFT DIRECT FUELING STATION FOR CARRIER TYPE AIRCRAFT AND HELICOPTERS

US ARMY CORPS OF ENGINEERS
OMAHA DISTRICT

MARK	DESCRIPTION	DATE	APPR.

MARK	DESCRIPTION	DATE	APPR.

U. S. ARMY ENGINEER DISTRICT
CORPS OF ENGINEERS
OMAHA DISTRICT

DESIGNED BY: JOSEPH J. PESEK
DWN BY: T.D.F.
CKD BY: C.R.M.
SUBMITTED BY: MICHAEL T. SMITH
FILE NAME:
SIZE: 33.1X22
PLOT SCALE:
DATE: JULY 2010
SOLICITATION NO.: Y
CONTRACT NO.: Y
FILE NUMBER: X
PLOT DATE:

DOD, STANDARDS
PRESSURIZED HYDRANT DIRECT FUELING SYSTEM

TYPICAL ARRANGEMENTS
SHEET 2 OF 2

SHEET IDENTIFICATION NUMBER
MS102

g6edxtdf
I:\dwgs\mech\OD38MS102.dwg

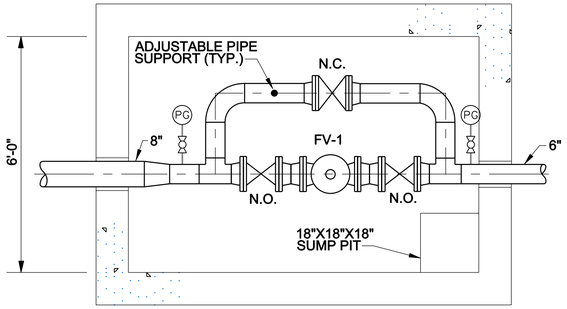

PLAN

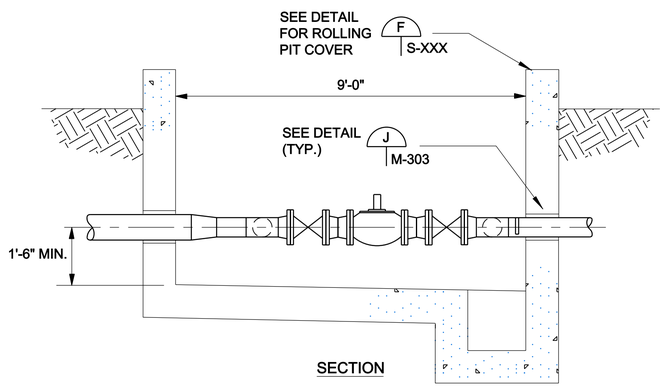

SECTION

DESIGNER NOTE:

IF PIT DEPTH EXCEEDS 5'-0", THE A/E SHALL PROVIDE FANS FOR VENTILATION IF DIRECTED BY THE COMMAND FUEL FACILITIES ENGINEER. IF SO DIRECTED, DUCT FAN TO DRAW AIR 0'-6" FROM THE FL.

FLUSHING VALVE VAULT DETAIL (F)
SITE PLAN

SCALE: ½ INCH = 1 FOOT

2' 1' 0 2'

SCALE: 1/2" = 1'-0"

US ARMY CORPS OF ENGINEERS
OMAHA DISTRICT

MARK	DESCRIPTION	DATE	APPR.

MARK	DESCRIPTION	DATE	APPR.

U. S. ARMY ENGINEER DISTRICT
CORPS OF ENGINEERS
OMAHA DISTRICT

DESIGNED BY: JOSEPH J. PESEK
DWN BY: T.D.F.
CKD BY: C.R.M.
SUBMITTED BY: MICHAEL T. SMITH
FILE NAME:
SIZE: 33.1X22
PLOT SCALE:
DATE: JULY 2010
SOLICITATION NO.: Y
CONTRACT NO.: Y
FILE NUMBER: X
PLOT DATE:

DOD, STANDARDS
PRESSURIZED HYDRANT DIRECT FUELING SYSTEM

FLUSHING VALVE PIT
PLAN AND SECTION

SHEET IDENTIFICATION NUMBER
MS501

g6edxdf
I:\dwgs\mech\OD38MS501.dwg

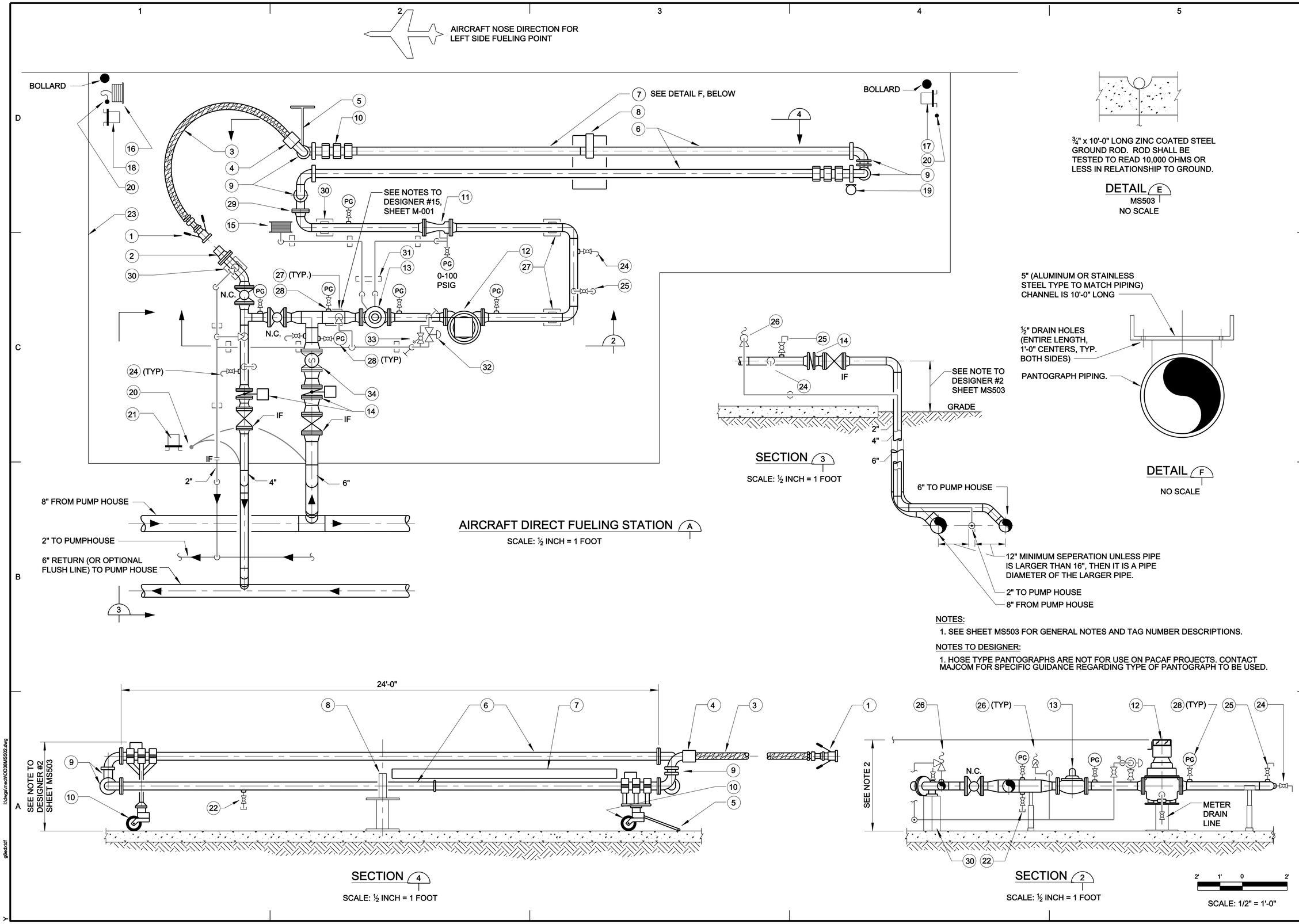

AIRCRAFT DIRECT FUELING STATION A
SCALE: ½ INCH = 1 FOOT

DETAIL E
MS503
NO SCALE

SECTION 3
SCALE: ½ INCH = 1 FOOT

DETAIL F
NO SCALE

NOTES:
1. SEE SHEET MS503 FOR GENERAL NOTES AND TAG NUMBER DESCRIPTIONS.

NOTES TO DESIGNER:
1. HOSE TYPE PANTOGRAPHS ARE NOT FOR USE ON PACAF PROJECTS. CONTACT MAJCOM FOR SPECIFIC GUIDANCE REGARDING TYPE OF PANTOGRAPH TO BE USED.

SECTION 4
SCALE: ½ INCH = 1 FOOT

SECTION 2
SCALE: ½ INCH = 1 FOOT

SCALE: 1/2" = 1'-0"

US ARMY CORPS OF ENGINEERS
OMAHA DISTRICT

MARK	DESCRIPTION	DATE	APPR.

MARK	DESCRIPTION	DATE	APPR.

DESIGNED BY: JOSEPH J. PESEK
DWN BY: T.D.F.
CKD BY: C.R.M.
SUBMITTED BY: MICHAEL T. SMITH
FILE NAME:
SIZE: 33.1X22
PLOT SCALE:
DATE: JULY 2010
SOLICITATION NO.: Y
CONTRACT NO.: Y
FILE NUMBER: X
PLOT DATE:

U. S. ARMY ENGINEER DISTRICT
CORPS OF ENGINEERS
OMAHA DISTRICT

DOD, STANDARDS
PRESSURIZED HYDRANT DIRECT FUELING SYSTEM

PANTOGRAPH
HOSE END TYPE
SHEET 1 OF 2

SHEET IDENTIFICATION NUMBER
MS502

TAGGED ITEM DESCRIPTIONS:

1. PRESSURE FUELING NOZZLE W/ 40 STRAINER AND DRY BREAK COUPLING
2. 2 ½" D-1 NOZZLE ADAPTER W/DUST CAP.
3. 3" DIAMETER API 1529 AIRCRAFT FUELING HOSE. NOMINAL 10' LENGTH.
4. SHUT-EMERGENCY BREAKAWAY COUPLING.
5. PULL HANDLE.
6. TWO PIPE SECTION, SS OR ALUMINUM PANTOGRAPH. NOMINAL LENGTH: 24' PER PIPE SECTION. DIAMETER OF PANTOGRAPH PIPING SHALL BE AS SPECIFIED.
7. HOSE TRAY, SEE DETAIL F/MS502
8. HINGED HOLDING BRACKET W/HASP AND LOCK. TO FOLD AND ALLOW PANTOGRAPH PIPE SECTIONS TO PASS WHEN EXTENDING
9. SWIVEL JOINTS (TYP).
10. ALL TERRAIN WHEELS (TYP FOR 4).
11. FUELING STATION VENTURI.
12. 600 GPM FUELING STATION METER. METER HEAD TO BE VISIBLE TO THE OPERATOR.
13. 4" REFUELING CONTROL VALVE. (PFV)
14. BUTTERFLY VALVE W/FUSIBLE LINK. SEE NOTE 3
15. HYDRAULIC DEADMAN HOSE REEL.
16. STATIC GROUND HOSE REEL.
17. EMERGENCY STOP PUSHBUTTON STATION, SEE DETAIL ON ES501
18. CONTROL STATION WITH PUSHBUTTONS FOR START/STOP AND LIGHT FOR INDICATING STATION CONDITION (SCHEME A ONLY), SEE DETAIL ON ES501
19. STEEL POST W/RESILIENT BUMPER.
20. GROUNDING ROD, SEE DETAIL. E/MS502
21. CATHODIC PROTECTION TEST STATION.
22. LOW POINT DRAIN.
23. CONCRETE PAD, SEE NOTE 4
24. SAMPLE CONNECTION, SEE DETAIL K/M-503 (TYPE III)
25. MANUAL AIR VENT
26. RELIEF VALVE, SEE DETAIL D/M-502 (TYPE III)
27. PIPE SUPPORT, SEE DETAIL C/MS505 (TYPE III)
28. PRESSURE GAGE, SEE DETAIL E/M-502 (TYPE III) SEE FLOW DIAGRAM FOR REQUIRED PRESSURE RANGES
29. PANTOGRAPH CONNECTION POINT. DIRECTION AND/OR ELEVATION FOR POINT OF CONNECTION MAY VARY BASED ON PANTOGRAPH TYPE, AND MAXIMUM ALLOWABLE HIEGHT RESTRICTIONS.
30. PIPE ANCHOR.
31. CHANNEL TYPE PIPE SUPPORT.
32. PANTOGRAPH PRESSURE CONTROL VALVE (PPCV).
33. BALL VALVE WITH DEADMAN SPRING RETURN HANDLE.
34. BASKET STRAINER W/ BALL VALVE DRAIN WITH PLUG

---- WORK THIS SHEET WITH MS502 ----

DESIGNER NOTES:

1. THE PANTOGRAPH ILLUSTRATED IS REPRESENTATIVE OF ONE MANUFACTURER AND IS NOT INTENDED TO RESTRICT PRODUCTS OF OTHER MANUFACTURERS SEE SPECIFICATIONS SECTION 33 52 43.12 FOR ALLOWABLE OPTIONAL DESIGNS. THE PANTOGRAPH MUST BE CERTIFIED BY THE AIR FORCE SYSTEM SAFETY ENGINEERING ANALYSIS (AFSSEA) TEAM (AIR FORCE PROJECTS), NAVAIRSYSCOM (AIR-4.4.5 (NAVY/MARINE CORPS PROJECTS), OR THE ARMY PETROLEUM OFFICE (ARMY PROJECTS).

2. DESIGNER MUST COORDINATE MAXIMUM ALLOWABLE HEIGHT OF PANTOGRAPH AND AIRCRAFT DIRECT FUELING STATION EQUIPMENT, VALVES AND PIPING WITH COMMAND FUEL FACILITIES ENGINEER.

3. CONSULT WITH COMMAND FUEL FACILITIES ENGINEER FOR DIRECTIONS ON USE OF FUSIBLE LINK BUTTERFLY VALVES.

4. CONTAINMENT IN AREA OF PANTOGRAPH SHALL BE IN ACCORDANCE WITH CURRENT STATE, FEDERAL AND LOCAL ENVIRONMENTAL REGULATIONS.

5. HOSE TYPE PANTOGRAPHS ARE NOT FOR USE ON PACAF PROJECTS. CONTACT MAJCOM FOR SPECIFIC GUIDANCE REGARDING TYPE OF PANTOGRAPH TO BE USED.

6. SEPERATE FLUSH LINE TO BE PROVIDED PER COMMAND FUELS FACILITY ENGINEER DIRECTION.

7. CONTACT MAJCOM FUEL ENGINEER TO DETERMINE FILTRATION/FUEL QUALITY MONITORING DEVICE AT PANTOGRAPH.

8. CONSULT WITH COMMAND SERVICE ENGINEER TO DETERMINE REQUIREMENT NEED FOR SPOOL PIECE OR INJECTOR AND BYPASS.

US ARMY CORPS OF ENGINEERS
OMAHA DISTRICT

MARK	DESCRIPTION	DATE	APPR.

MARK	DESCRIPTION	DATE	APPR.

DESIGNED BY: JOSEPH J. PESEK
DATE: JULY 2010
DWN BY: T.D.F.
CKD BY: C.R.M.
SOLICITATION NO.: Y
SUBMITTED BY: MICHAEL T. SMITH
CONTRACT NO.: X
FILE NUMBER: X
FILE NAME:
SIZE: 33.1X22
PLOT SCALE:
PLOT DATE:

U. S. ARMY ENGINEER DISTRICT
CORPS OF ENGINEERS
OMAHA DISTRICT

DOD, STANDARDS
PRESSURIZED HYDRANT DIRECT FUELING SYSTEM

PANTOGRAPH
HOSE END TYPE
SHEET 2 OF 2

SHEET IDENTIFICATION NUMBER
MS503

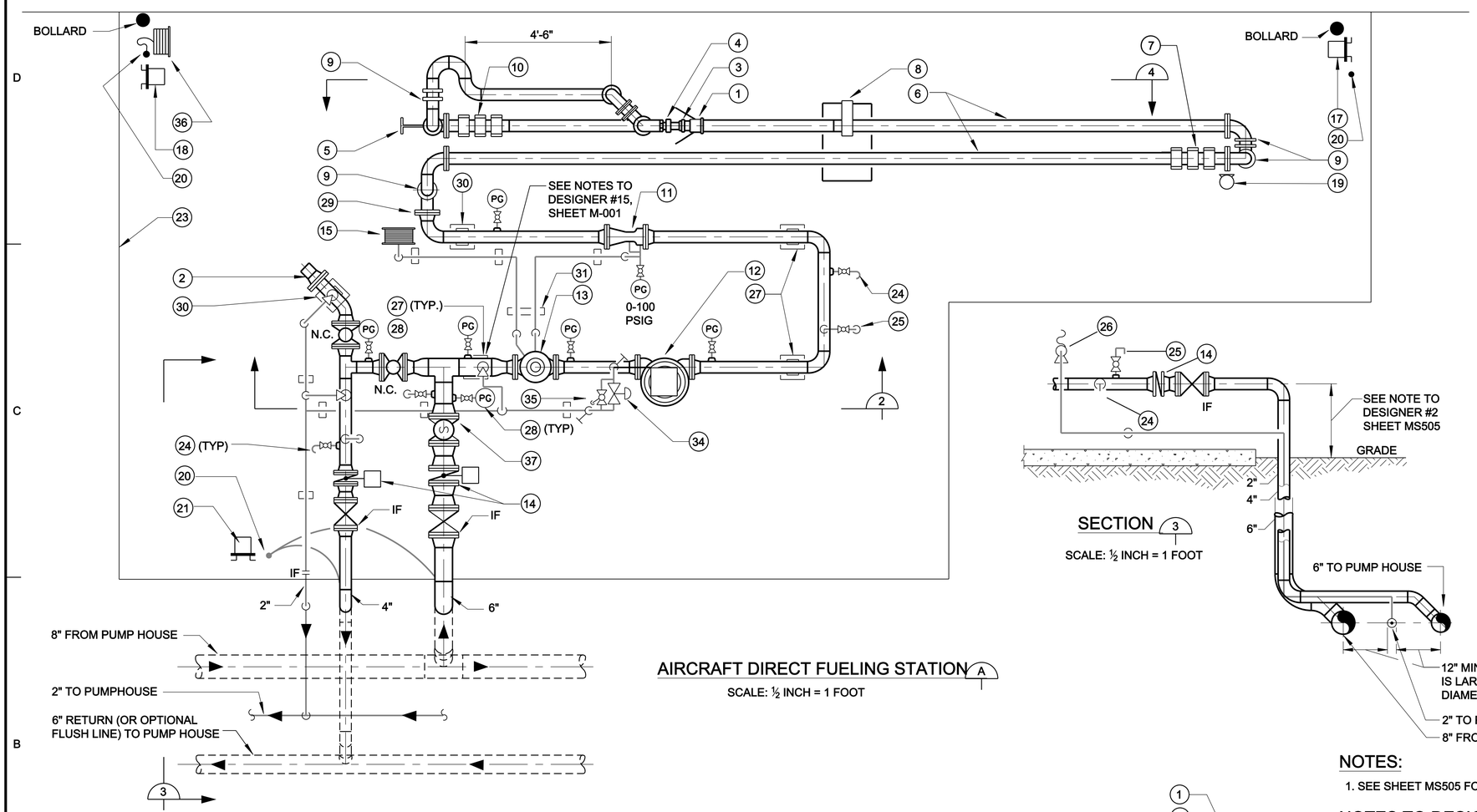

AIRCRAFT DIRECT FUELING STATION (A)

SCALE: ½ INCH = 1 FOOT

SECTION (3)

SCALE: ½ INCH = 1 FOOT

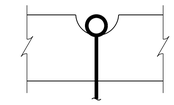

¾" x 10'-0" LONG ZINC COATED STEEL GROUND ROD. ROD SHALL BE TESTED TO READ 10,000 OHMS OR LESS IN RELATIONSHIP TO GROUND.

DETAIL (E)
MS505
NO SCALE

NOTES:

1. SEE SHEET MS505 FOR GENERAL NOTES AND TAG NUMBER DESCRIPTIONS.

NOTES TO DESIGNER:

1. HOSELESS TYPE PANTOGRAPHS ARE NOT FOR USE ON NAVY/MARINE CORPS PROJECTS. CONTACT MAJCOM FOR SPECIFIC GUIDANCE REGARDING TYPE OF PANTOGRAPH TO BE USED.

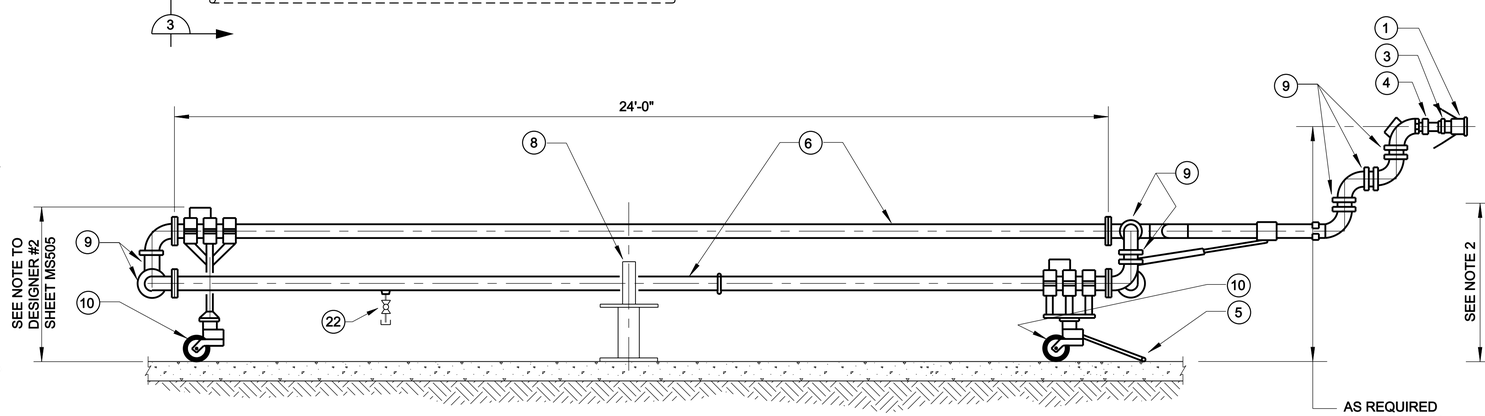

SECTION (4)

SCALE: ½ INCH = 1 FOOT

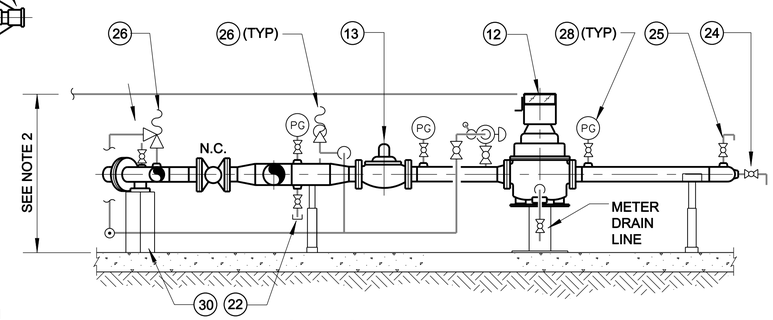

SECTION (2)

SCALE: ½ INCH = 1 FOOT

2' 1' 0 2'

SCALE: 1/2" = 1'-0"

US ARMY CORPS OF ENGINEERS
OMAHA DISTRICT

MARK	DESCRIPTION	DATE	APPR.

MARK	DESCRIPTION	DATE	APPR.

U. S. ARMY ENGINEER DISTRICT
CORPS OF ENGINEERS
OMAHA DISTRICT

DESIGNED BY: JOSEPH J. PESEK
DWN BY: T.D.F.
CKD BY: C.R.M.
SUBMITTED BY: MICHAEL T. SMITH
DATE: JULY 2010
SOLICITATION NO.: Y
CONTRACT NO.: Y
FILE NUMBER: X
FILE NAME:
SIZE: 33.1X22
PLOT SCALE:
PLOT DATE:

DOD STANDARDS
PRESSURIZED HYDRANT DIRECT FUELING SYSTEM

PANTOGRAPH
HOSELESS TYPE
SHEET 1 OF 2

SHEET IDENTIFICATION NUMBER
MS504

TAGGED ITEM DESCRIPTIONS:

1. PRESSURE FUELING NOZZLE
2. 2 ½" D-1 NOZZLE ADAPTER W/DUST CAP.
3. COMPACT SWIVEL JOINT (TYP. FOR 1)
4. SHUT-OFF VALVE 40 MESH STRAINER
5. DRAW BAR
6. TWO PIPE SECTION SS PANTOGRAPH, NORMAL LENGTH: 24' PER PIPE SECTION. DIAMETER OF PANTOGRAPH SHALL BE AS SPECIFIED
7. SUPPORTING STRUCTURE
8. HINGED HOLDING BRACKET W/HASP AND LOCK. TO FOLD AND ALLOW PANTOGRAPH PIPE SECTIONS TO PASS WHEN EXTENDING
9. FLANGED SWIVEL JOINTS (TYP).
10. SPRING LOADED CASTERS
11. FUELING STATION VENTURI.
12. 600 GPM FUELING STATION METER. METER HEAD TO BE VISIBLE TO THE OPERATOR.
13. 4" REFUELING CONTROL VALVE.
14. BUTTERFLY VALVE W/FUSIBLE LINK
15. HYDRAULIC DEADMAN HOSE REEL.
16. PANTOGRAPH VENTING ASSEMBLY
17. EMERGENCY STOP PUSHBUTTON STATION, SEE DETAIL ON ES501
18. CONTROL STATION WITH PUSHBUTTONS FOR START/STOP AND LIGHT FOR INDICATING STATION CONDITION (SCHEME A ONLY), SEE DETAIL ON ES501
19. STEEL POST W/RESILIENT BUMPER.
20. PANTOGRAPH SAMPLING & DRAIN ASSEMBLY
21. CATHODIC PROTECTION TEST STATION.
22. 2" LOW POINT DRAIN.
23. PANTOGRAPH CONNECTION POINT. DIRECTION AND/OR ELEVATION FOR POINT OF CONNECTION MAY VARY BASED ON PANTOGRAPH TYPE AND MAXIMUM ALLOWABLE HEIGHT RESTRICTIONS.
24. SAMPLE CONNECTION, SEE DETAIL K / M-503 (TYPE III)
25. MANUAL AIR VENT
26. RELIEF VALVE, SEE DETAIL D / M-502 (TYPE III)
27. PIPE SUPPORT, SEE DETAIL C / M-503 (TYPE III)
28. PRESSURE GAGE, SEE DETAIL E / M-502 (TYPE III) SEE FLOW DIAGRAM FOR REQUIRED PRESSURE RANGES
29. PANTOGRAPH PRESSURE GAGE ASSEMBLY.
30. PIPE ANCHOR.
31. CHANNEL TYPE PIPE SUPPORT.
32. GROUND ROD, SEE DETAIL E / MS504
33. CONCRETE PAD, SEE NOTE 4
34. PANTOGRAPH PRESSURE CONTROL VALVE (PPCV).
35. BALL VALVE WITH DEADMAN SPRING RETURN HANDLE.
36. STATIC GROUND HOSE REEL.
37. BASKET STRAINER W/ BALL VALVE DRAIN WITH PLUG

---- WORK THIS SHEET WITH MS504 ----

DESIGNER NOTES:

1. THE PANTOGRAPH ILLUSTRATED IS REPRESENTATIVE OF ONE MANUFACTURER AND IS NOT INTENDED TO RESTRICT PRODUCTS OF OTHER MANUFACTURERS SEE SPECIFICATIONS SECTION 33 52 43.12 FOR ALLOWABLE OPTIONAL DESIGNS. THE PANTOGRAPH MUST BE CERTIFIED BY THE AIR FORCE SYSTEM SAFETY ENGINEERING ANALYSIS (AFSSEA) TEAM (AIR FORCE PROJECTS), NAVAIRSYSCOM (AIR-4.4.5 (NAVY/MARINE CORPS PROJECTS), OR THE ARMY PETROLEUM OFFICE (ARMY PROJECTS).

2. DESIGNER MUST COORDINATE MAXIMUM ALLOWABLE HEIGHT OF PANTOGRAPH AND AIRCRAFT DIRECT FUELING STATION EQUIPMENT, VALVES AND PIPING WITH COMMAND FUEL FACILITIES ENGINEER.

3. CONSULT WITH COMMAND FUEL FACILITIES ENGINEER FOR DIRECTIONS ON USE OF FUSIBLE LINK BUTTERFLY VALVES.

4. CONTAINMENT IN AREA OF PANTOGRAPH SHALL BE IN ACCORDANCE WITH CURRENT STATE, FEDERAL AND LOCAL ENVIRONMENTAL REGULATIONS.

5. HOSELESS TYPE PANTOGRAPHS ARE NOT FOR USE ON NAVY/MARINE CORPS PROJECTS. CONTACT MAJCOM FOR SPECIFIC GUIDANCE REGARDING TYPE OF PANTOGRAPH TO BE USED.

6. SEPERATE FLUSH LINE TO BE PROVIDED PER COMMAND FUELS FACILITY ENGINEER DIRECTION.

7. CONTACT MAJCOM FUEL ENGINEER TO DETERMINE FILTRATION/FUEL QUALITY MONITORING DEVICE AT PANTOGRAPH.

8. CONSULT WITH COMMAND SERVICE ENGINEER TO DETERMINE REQUIREMENT NEED FOR SPOOL PIECE OR INJECTOR AND BYPASS.

US ARMY CORPS OF ENGINEERS
OMAHA DISTRICT

MARK	DESCRIPTION	DATE	APPR.

MARK	DESCRIPTION	DATE	APPR.

DESIGNED BY: JOSEPH J. PESEK
DWN BY: T.D.F.
CKD BY: C.R.M.
SUBMITTED BY: MICHAEL T. SMITH
DATE: JULY 2010
SOLICITATION NO.: X
CONTRACT NO.: X
FILE NUMBER: X
FILE NAME:
SIZE: 33.1X22
PLOT SCALE:
PLOT DATE:

U. S. ARMY ENGINEER DISTRICT
CORPS OF ENGINEERS
OMAHA DISTRICT

DOD, STANDARDS
PRESSURIZED HYDRANT DIRECT FUELING SYSTEM

PANTOGRAGH
HOSELESS TYPE
SHEET 2 OF 2

SHEET IDENTIFICATION NUMBER
MS505

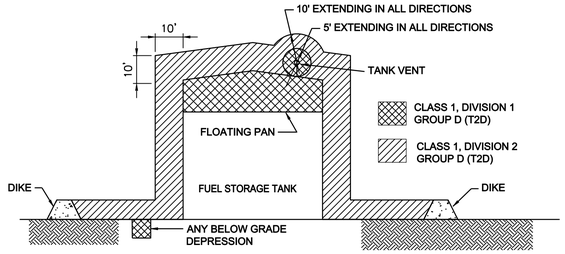

FUEL STORAGE TANK HAZARDOUS AREA DETAIL
NO SCALE

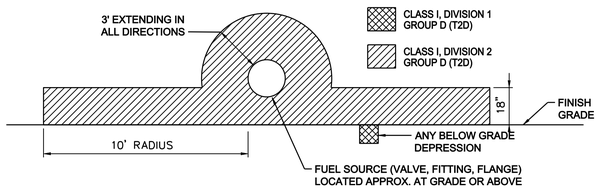

EXTERIOR FUEL PIPING HAZARDOUS AREA DETAIL
NO SCALE

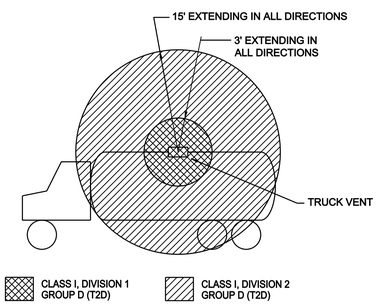

FUEL TRUCK HAZARDOUS AREA DETAIL
NO SCALE

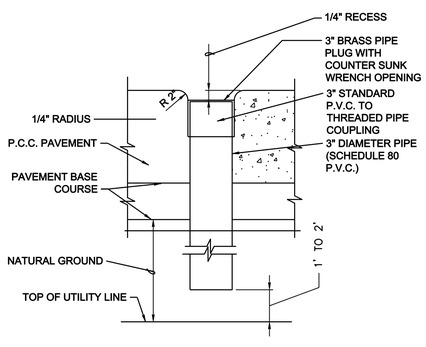

CATHODIC PROTECTION ACCESS PORT
NO SCALE

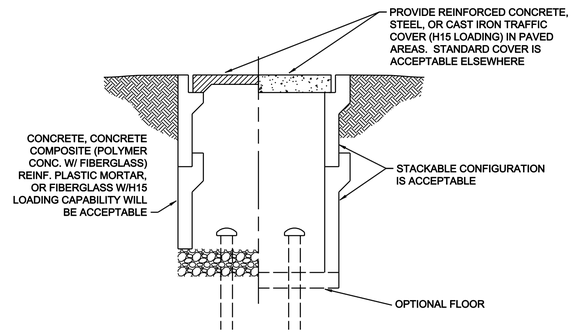

ELECTRICAL OR TELEPHONE HANDHOLE DETAIL
NO SCALE

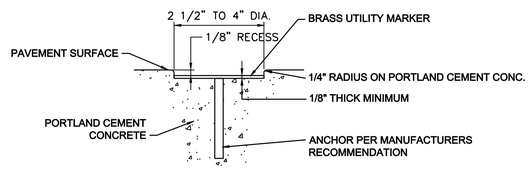

UTILITY MARKER DETAIL
NO SCALE

NOTE:

UTILITY MARKERS SHALL BE PLACED APPROXIMATELY EVERY 200' ALONG UTILITY LINES AND WHERE THE UTILITY CHANGES DIRECTION.

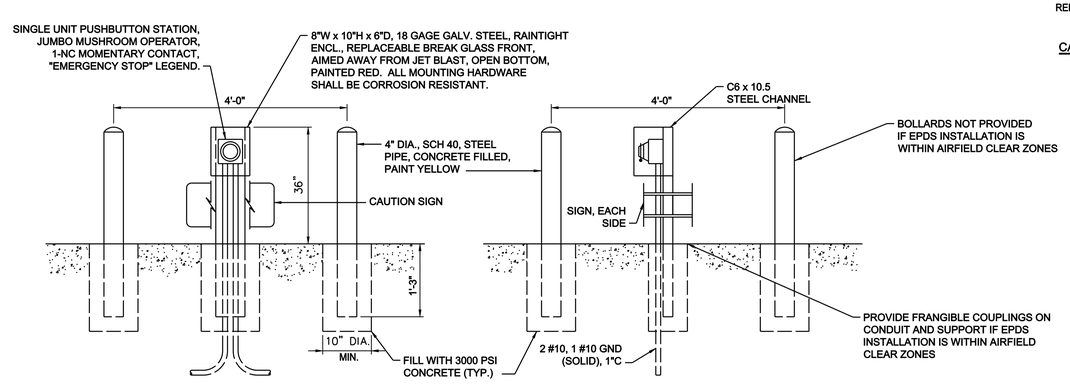

EMERGENCY POWER DOWN STATION (EPDS) DETAIL
NO SCALE

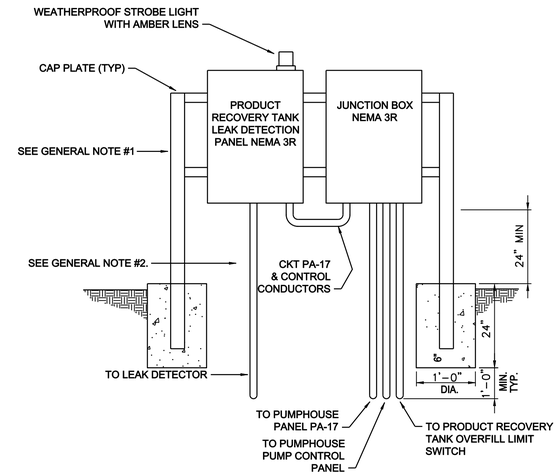

NOTE:

1. FOR CONDUIT AND CONDUCTOR REQUIREMENTS SEE PRODUCT RECOVERY TANK ELECTCRICAL PLAN VIEW ON SHEET ES502.

PRODUCT RECOVERY TANK EQ. STRUCTURE
NO SCALE

GENERAL NOTES:

1. PROVIDE A STEEL SUPPORT CONSTRUCTED OF TUBULAR STEEL (TS) 2 ½" x 2 ½" x 3/16" USE WELDED COSTRUCTION.

2. ALL CONDUITS ABOVE GRADE AND ALL ELBOWS BELOW GRADE SHALL BE GALVANIZED RIGID STEEL.

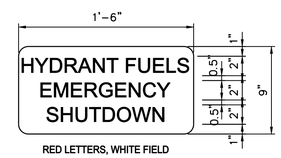

RED LETTERS, WHITE FIELD

CAUTION SIGN DETAIL

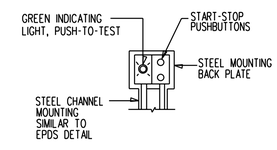

START/STOP STATION DETAIL
NO SCALE

DESIGNER NOTES:

1. A CATHODIC PROTECTION SYSTEM SHALL BE REQUIRED FOR ALL METALLIC BURIED STRUCTURES AND PIPING. SYSTEM DESIGNER SHALL BE NACE CERTIFIED.
2. ANY REQUIRED AREA TYPE LIGHTING SHALL BE DESIGNED SUCH THAT IT SHALL NOT INTERFERE WITH AIRCRAFT OPERATIONS.
3. IF CUT-N-COVER TANKS ARE USED RATHER THAN ABOVE GROUND TANKS, SHOW HAZARDOUS AREA DETAIL APPROPRIATE FOR THAT TANK. SEE CUT-N-COVER TANK STANDARD DRAWINGS.
4. FINAL APPROVAL OF EPDS SHALL BE BY THE AIRFIELD MANAGER. IN SOME CASES THEY MAY BE CONSIDERED OBSTRUCTIONS AND REQUIRE OBSTRUCTION LIGHTS.

US ARMY CORPS
OF ENGINEERS
OMAHA DISTRICT

MARK	DESCRIPTION	DATE	APPR.

MARK	DESCRIPTION	DATE	APPR.

DESIGNED BY: KEA | DATE: JULY 2010
DWN BY: KEA | CKD BY: SLO | SOLICITATION NO.: Y
SUBMITTED BY: SLO | CONTRACT NO.: Y
FILE NAME: CD3SES501.dwg | FILE NUMBER: X
SIZE: 33.1X22 | PLOT SCALE: 1 / 1in. | PLOT DATE: 6/28/2010

U. S. ARMY ENGINEER DISTRICT
CORPS OF ENGINEERS
OMAHA DISTRICT

DOD, STANDARDS:
PRESSURIZED HYDRANT DIRECT FUELING SYSTEM

MISC. DETAILS

SHEET IDENTIFICATION NUMBER
ES501

I:\dwgs\elec\CD3SES501.dwg
gdecdcses

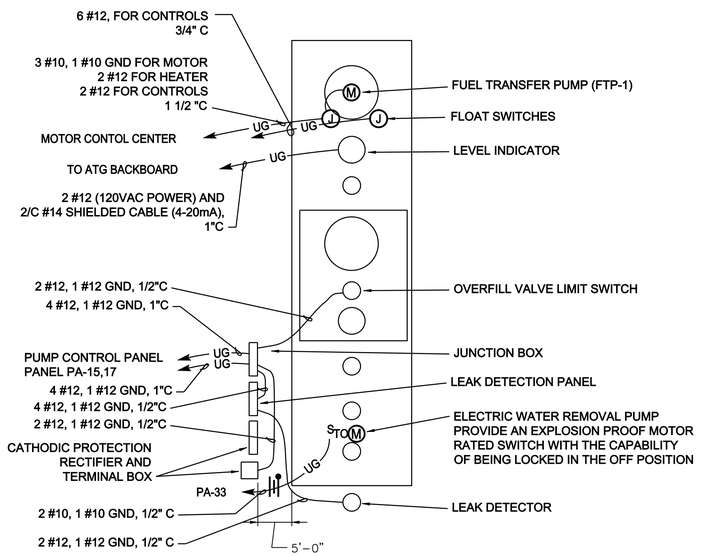

NOTES:

1. THE ENTIRE VOLUME WITHIN THE PIT AT THE PRODUCT RECOVERY TANK SHALL BE CONSIDERED A CLASS 1, DIVISION 1, GROUP D HAZARDOUS LOCATION. ALSO THE VOLUME WITHIN A 5 FOOT RADIUS FROM THE TOP OF THE TANK VENT SHALL BE CONSIDERED A CLASS 1, DIVISION 1, GROUP D HAZARDOUS LOCATION.
2. SEE SHEET ES501 FOR MOUNTING RACK DETAIL.
3. ALL HOMERUNS GO TO THE PUMPHOUSE CONTROL ROOM.

PRODUCT RECOVERY TANK ELECTRICAL PLAN VIEW

NO SCALE

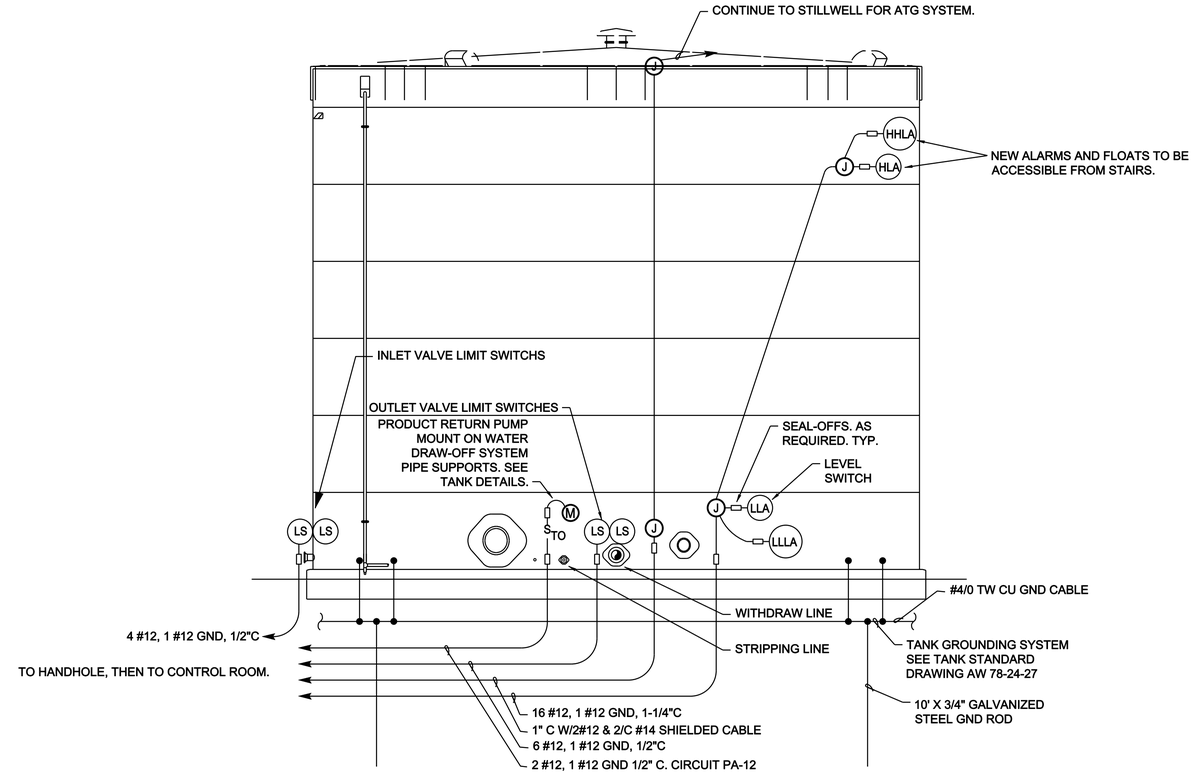

NOTES:

1. SEE TANK DRAWINGS FOR EXACT LOCATION OF LEVEL SWITCHES AND PRODUCT RETURN PUMP.
2. WELD CONDUIT SUPPORT STRUCTURES (UNISTRUT OR EQUAL) TO TANK WALL.
3. SEE ES501 FOR HAZARDOUS AREA LOCATIONS.

STORAGE TANK ELECTRICAL ELEVATION

NO SCALE

NOTES TO DESIGNER:

1. IF ELECTRONIC TYPE LEVEL ALARMS ARE TO BE USED INSTEAD OF THE MECHANICAL FLOAT TYPE INDICATED ON THE STORAGE TANK ELECTRICAL ELEVATION THEN MODIFY THE DETAIL WITH REQUIREMENTS APPROPRIATE TO THE ELECTRONIC LEVEL ALARMS.

2. IF AN ATG SYSTEM OTHER THAN THE ENRAF 854 TYPE, DEPICTED HERE, IS TO BE USED, THE ABOVE DETAIL SHALL BE MODIFIED TO SHOW APPROPRIATE CONDUITS AND CONDUCTORS FOR THAT TYPE OF ATG SYSTEM.

US ARMY CORPS
OF ENGINEERS
OMAHA DISTRICT

MARK	DESCRIPTION	DATE	APPR.

MARK	DESCRIPTION	DATE	APPR.

U. S. ARMY ENGINEER DISTRICT
CORPS OF ENGINEERS
OMAHA DISTRICT

DESIGNED BY: KEA | DATE: JULY 2010
DWN BY: KEA | CKD BY: SLO | SOLICITATION NO.: Y
SUBMITTED BY: RJA | CONTRACT NO.: X
FILE NAME: O039ES502.dwg | FILE NUMBER: X
SIZE: 33.1X22 | PLOT SCALE: 1 / In. | PLOT DATE: 6/28/2010

DOD, STANDARDS
PRESSURIZED HYDRANT DIRECT FUELING SYSTEM

TANK DETAILS

SHEET
IDENTIFICATION
NUMBER
ES502

t:\dwgs\sleko\O039ES502.dwg
g8edc6ea

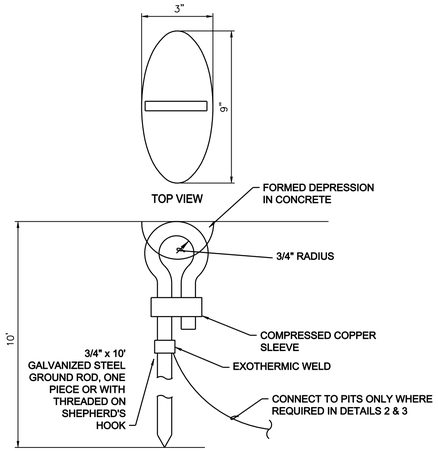

STATIC GROUND DETAIL

NO SCALE

1 ES101,ES503 | ES503

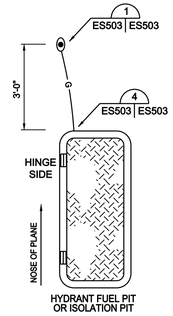

HYDRANT OUTLET PIT OR ISOLATION PIT GROUND PLACEMENT DETAIL (PANTOGRAPH AND HYDRANT HOSE TRUCK)

NO SCALE

2 ES101 | ES503

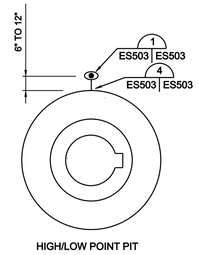

HIGH/LOW POINT PIT GROUND PLACEMENT DETAIL

NO SCALE

3 ES101 | ES503

BILL OF MATERIALS		
PART NO.	QUANTITY	DESCRIPTION
1	1	ALUMINUM T-BAR, 10 1/4 X 2 1/2 X 1 1/4 X 1/8
2	2	GROUND WIRE TERMINAL, BURNDY KA29U (OR EQUAL)
3	4	RECEPTACLE,MS 90298. KINGS ELECTRONICS PART NO. K-3943. ORDER FROM NEWARK, POWELL, OR RICHIE.
4	2	TERMINAL MOUNTING BOLTS, 1/4 X 24 X 1/2
5	4	SET SCREW, SELF-TOPPING, 8 X 32 X 1/2
6	4	LOCK WASHER, STAR, 3/8 "
7	2	LOCK WASHER, SPRING, 1/4 "
8	4	ASSEMBLY MOUNTING BOLTS, 1/4 X 24 X 1

HOLE DATA	
PART	DIAMETER
1	5/16"
3	3/8"
4	5/16"
5	7/64"

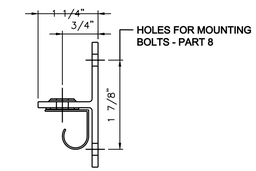

END VIEW

NO SCALE

NOTES:

1. WHEN STATIC GROUND IS LOCATED IN NEW CONCRETE, IT SHALL BE INSTALLED PRIOR TO CONCRETE PLACEMENT AND THE FRESH CONCRETE SHALL BE FORMED AROUND THE GROUND EYE AS SHOWN.

2. WHEN THE STATIC GROUND IS LOCATED IN EXISTING CONCRETE, THE CONCRETE SHALL BE BORED WITH A SIX INCH DIAMETER CORE TO FULL DEPTH, THE GROUND ROD SHALL BE INSTALLED IN THE CENTER OF THE HOLE AND THEN THE HOLE SHALL BE FILLED WITH GROUT THAT CONFORMS TO ASTM C 1107 GRADE A, B, OR C AND FORMED AROUND THE GROUND ROD AS SHOWN.

3. WHEN THE STATIC GROUND IS LOCATED IN A DIRT/GRASS AREA, IT SHALL BE INSTALLED IN A 12"X12"X4" CONCRETE PAD.

4. STATIC GROUNDS SHALL PROVIDE A RESISTANCE OF NO MORE THAN 10,000 OHMS.

5. EACH STATIC GROUND SHALL HAVE IT'S RESISTANCE TESTED JUST PRIOR TO TURN OVER TO THE USER. THE TESTS SHALL BE RECORDED IN A BOOKLET TO BE PROVIDED TO THE USER. THE TEST DATE, RESISTANCE, AND LOCATION SHALL BE RECORDED FOR EACH STATIC GROUND.

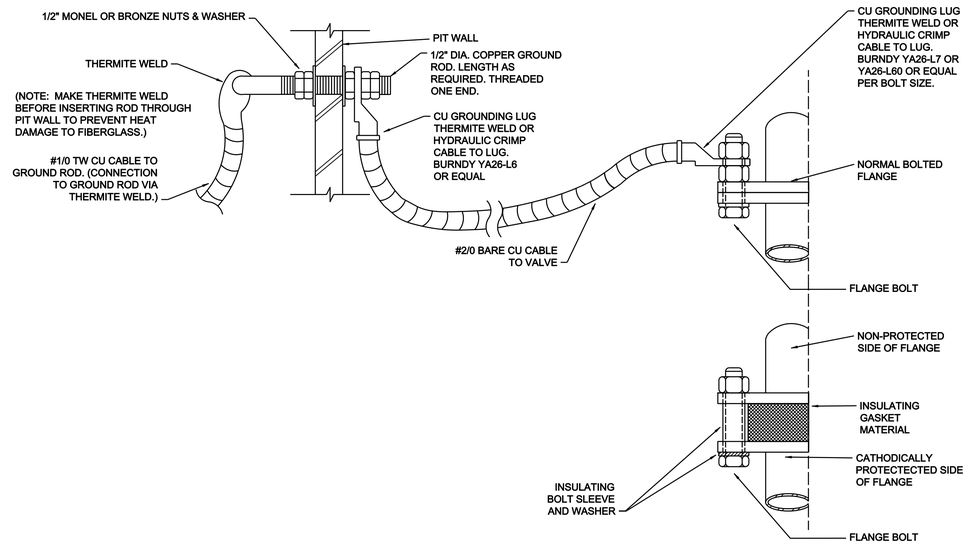

PIT CABLE PENETRATION AND PIT FLANGE GROUNDING DETAIL

NO SCALE

1 ES101, ES503 | ES503

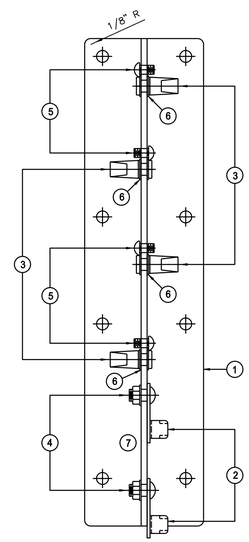

PLAN VIEW

NO SCALE

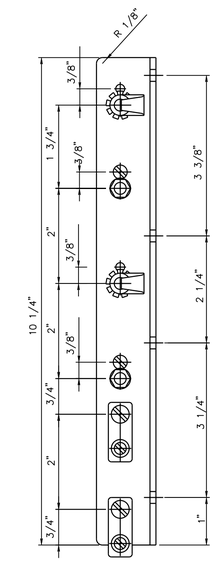

SIDE VIEW

NO SCALE

STATIC GROUND RECEPTACLE ASSEMBLY

NO SCALE

DESIGNERS NOTE:

USE THE ABOVE DETAIL ONLY IF DIRECTED BY THE COMMAND FUELS ENGINEER TO USE IN LIEU OF THE STATIC GROUND REELS SHOWN ON SHEETS MS502 & MS504.

NOTES TO DESIGNER

1. THE MAJOR COMMAND WILL PROVIDE THE STATIC GROUND LOCATIONS FOR THE SPECIFIC AIRPLANE IN EACH PROJECT.

US ARMY CORPS OF ENGINEERS
OMAHA DISTRICT

MARK	DESCRIPTION	DATE	APPR.

MARK	DESCRIPTION	DATE	APPR.

U. S. ARMY ENGINEER DISTRICT
CORPS OF ENGINEERS
OMAHA DISTRICT

DESIGNED BY: KEA | DATE: JULY 2010 | SOLICITATION NO.: Y
DWN BY: KEA | CKD BY: SLO | CONTRACT NO.: Y
SUBMITTED BY: RLA | FILE NUMBER: X
FILE NAME: O039ES503.dwg | PLOT DATE: 6/30/2010
SIZE: 33.1X22 | PLOT SCALE: 1 1/ in.

DOD, STANDARDS
PRESSURIZED HYDRANT DIRECT FUELING SYSTEM

GROUNDING DETAILS

SHEET IDENTIFICATION NUMBER
ES503

I:\dwgs\elec\O039ES503.dwg

g6edc6ea