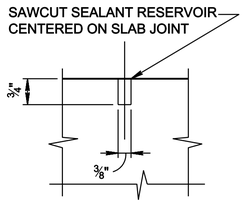

DETAIL A
NO SCALE

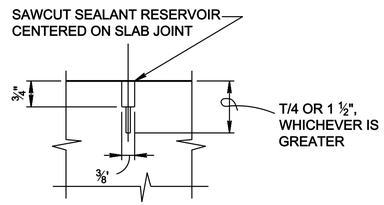

DETAIL B
NO SCALE

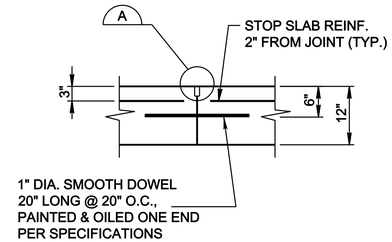

DOWELED CONSTRUCTION JOINT
12" SLAB
NO SCALE

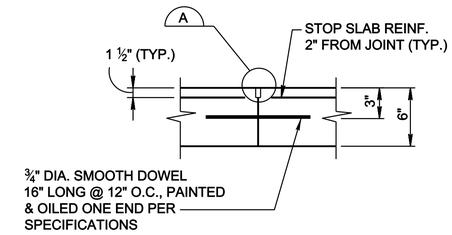

DOWELED CONSTRUCTION JOINT
6" SLAB
NO SCALE

CLASS "B" LAP SPLICE LENGTH (INCHES)	
BAR SIZE NO.	f'c = 4000 PSI
3	12
4	15
5	19
6	23
7	33

LAP SPLICE LENGTH FOR REINFORCED CONCRETE
NOT ALL BAR SIZES LISTED MAY BE REQUIRED

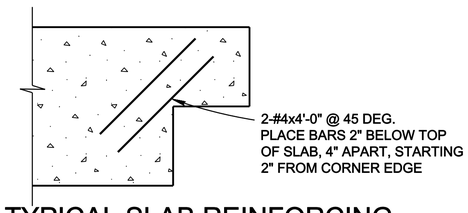

TYPICAL SLAB REINFORCING
AT RE-ENTRANT CORNER
NO SCALE

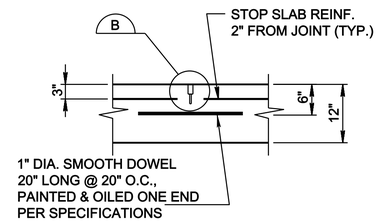

CONTRACTION JOINT
12" SLAB
NO SCALE

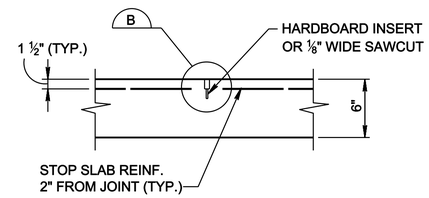

CONTRACTION JOINT
6" SLAB
NO SCALE

GENERAL NOTES:
1. REFERENCE ELEVATION 100'-0" EQUALS ##.#' MEAN SEA LEVEL ELEVATION.
2. SLAB-ON-GRADE CONTRACTION JOINTS ARE DENOTED "CJ" IN PLAN. AT CONTRACTOR'S OPTION, CONSTRUCTION JOINTS MAY BE SUBSTITUTED FOR CONTRACTION JOINTS. SEE THIS SHEET FOR SLAB-ON-GRADE AND JOINT DETAILS.
3. ALL FLOOR SLABS SHALL BE TREATED WITH A SEALER/HARDENER. SEE SPECIFICATION 03 31 00.00 10.
4. SUBGRADE PREPARATION FOR SLABS SHALL BE PER THE FOUNDATION REPORT.
5. EXPANSION JOINTS ARE DENOTED "EJ" ON THE PLAN.
6. ALL FLOOR JOINTS IN THE PUMP ROOM AREA SHALL BE SEALED WITH JET FUEL RESISTANT SEALANT.
7. SLAB-ON-GRADE THICKNESS SHALL BE 12" UNLESS OTHERWISE NOTED. REINFORCE WITH #4 BARS @ 12" ON CENTER EACH WAY. SEE PIPE SUPPORT SCHEDULE FOR ADDITIONAL REINFORCEMENT BENEATH PIPE SUPPORTS.
8. SLAB-ON-GRADE THICKNESS IN THE CONTROL ROOM SHALL BE 6". REINFORCE WITH #3 BARS AT 18" ON CENTER EACH WAY.
9. MOTOR CONTROL CENTER TRENCH, APPROXIMATELY 12'-0" LONG. MAIN DISTRIBUTION SWITCHGEARA ND POWER CONTROL PANEL TRENCH APPROXIMATELY 5'-6" LONG. COORDINATE WITH EQUIPMENT MANUFACTURER FOR EXACT LENGTH OF TRENCH.
10. PUMP ROOM FLOOR SLAB SHALL BE SLOPED TO DRAINS AT ⅛" / FT. SEE PLAN.

MATERIAL NOTES:
1. REINFORCED CONCRETE:
A. CONCRETE: SPECIFIED COMPRESSIVE STRENGTH f'c =4000 PSI
B. REINFORCING BARS: SPECIFIED YIELD STRENGTH Fy = 60 KSI (GRADE 60)
2. STRUCTURAL STEEL
A. ROLLED SHAPES AND PLATES: SPECIFIED YIELD STRENGTH Fy = 36 KSI (ASTM A36)
B. STRUCTURAL TUBING: SHALL CONFORM TO ASTM A500, GRADE B.
3. WELDING ELECTRODES: ALL WELDING SHALL BE PERFORMED WITH E70 ELECTRODES.
4. ANCHOR BOLTS: SHALL CONFORM TO ASTM A307.
5. BOLTED CONNECTIONS: SHALL CONFORM TO ASTM A307 UNLESS NOTED OTHERWISE.
6. HEADED ANCHOR STUDS: SHALL CONFORM TO ASTM A108.
7. SEE MASONRY NOTES ON S-802.

PRE-ENGINEERED METAL BUILDING NOTES:
1. PRE-ENGINEERED METAL BUILDING SHALL BE DESIGNED ACCORDING TO THE METAL BUILDING MANUFACTURERS' ASSOCIATION (MBMA), METAL BUILDING SYSTEMS MANUAL, 2006 EDITION STANDARDS USING THE FOLLOWING CRITERIA:
A. BUILDING USE CATEGORY IV.
B. MINIMUM DESIGN ROOF LIVE LOAD: (CONSTRUCTION AND MAINTENANCE) = 20 PSF (AREA REDUCTION ALLOWED).
C. SNOW LOADS (UFC 3-310-01 AND ASCE 7-05)
1. GROUND SNOW LOAD Pf= ## psf
2. EXPOSURE FACTOR Ce= 1.0
3. THERMAL FACTOR Ct= 1.1
4. IMPORTANCE FACTOR I= 1.2
D. WIND LOADS:
(1) BASIC WIND SPEED: V = ## MPH (3-SECOND GUST).
E. SEISMIC LOADS:
(1) SEISMIC USE GROUP III
(2) Ss = #.##
(3) S1 = #.##
(4) IMPORTANCE FACTOR: 1 = 1.50.
(5) SITE CLASSIFICATION "#"
(6) SEISMIC DESIGN CATEGORY "#"
F. COLLATERAL ROOF DEAD LOADS FOR MISCELLANEOUS SUSPENDED MECHANICAL AND ELECTRICAL EQUIPMENT = 4 PSF UNIFORM LOAD.
G. CRANE LOADS: THE RIGID FRAMES SHALL BE DESIGNED FOR A 1 TON CAPACITY BRIDGE CRANE. SEE SHEET S-302 FOR LOCATION AND DETAILS. OBTAIN FINAL CRANE LOADS FROM CRANE MFR.
2. MINOR VARIATIONS IN THE BUILDING'S DIMENSIONS (DENOTED BY AN ASTERISK, *) MAY BE SUBMITTED FOR REVIEW AND POSSIBLE APPROVAL IF REQUIRED TO CONFORM TO AN INDIVIDUAL BUILDING SUPPLIER'S STANDARDS.
3. FOR ALLOWABLE FOUNDATION LOADS AT COLUMN LOCATIONS, REFER TO FRAME REACTION TABLE ON SHEET S-502. IF ACTUAL BUILDING LOADS EXCEED THOSE LISTED, PRE-ENGINEERED BUILDING SUPPLIER SHALL BE RESPONSIBLE FOR REQUIRED FOUNDATION RE-DESIGN AND MODIFICATION. BUILDING SUPPLIER SHALL SUBMIT FOUNDATION LOADS FOR REVIEW AND APPROVAL.
4. ANCHOR BOLT DESIGN AND REQUIREMENTS SHALL BE COORDINATED BETWEEN THE PRE-ENGINEERED METAL BUILDING SUPPLIER AND THE PRIMARY CONTRACTOR. CONTRACTOR SHALL SUBMIT DESIGNS FOR REVIEW AND APPROVAL.
5. THE CONTRACTOR SHALL BE RESPONSIBLE FOR SIZING AND PLACING BUILDING X-BRACING AND OTHER STRUCTURAL MEMBERS SUCH THAT THEY DO NOT INTERFERE WITH DOORS, LOUVERS, FANS, HOODS, AND OTHER MECHANICAL AND ELECTRICAL ITEMS LOCATED ALONG THE BUILDING'S WALLS AND ROOF.
6. BUILDING OVERVIEW: THE BUILDING FOUNDATION WAS DESIGNED BASED UPON THE FOLLOWING CRITERIA CONCERNING THE PRE-ENGINEERED METAL BUILDING SUPERSTRUCTURE:
A. FUTURE EXPANSIONS OR ADDITIONS TO THIS BUILDING ARE NOT CONSIDERATIONS.
B. FRAMING AT LINES 1 THRU 4 CONSIST OF CLEAR-SPAN RIGID FRAMES.
C. CROSS BRACING SHALL BE PROVIDED IN COLUMN LINES A & D.
D. DOWNWARD AND UPLIFT REACTIONS, AS WELL AS LATERAL LOADS PER-PENDICULAR TO THE FOUNDATION WALLS ARE CARRIED BY SPREAD FOOTINGS.
E. LATERAL LOADS PARALLEL TO THE FOUNDATION WALLS ARE CARRIED BY THE FOUNDATION SYSTEM.
F. ROOF WILL BE X-BRACED AS REQUIRED FOR LATERAL STABILITY.

NOTES TO THE DESIGNER:
1. FOUNDATION DETAILS SHOWN ARE TYPICAL FOR AN ENCLOSED PUMP HOUSE WHERE DESIGN FOR FROST IS A CONSIDERATION. ALTERNATE FOIUNDATION DETAILS MAY BE PREFERRED FOR OPEN PUMP SHELTERS OR IN LOCATIONS WHERE A SLAB WITH A THICKENED EDGE MAY BE SUITABLE.
2. A SUBSURFACE INVESTIGATION WILL BE PERFORMED AND A FOUNDATION ANALYSIS WILL BE PREPARED. FOUNDATION DESIGN AND SUBGRADE PREPARATION WILL BE IN ACCORDANCE WITH THE RECOMMENDATIONS OF THE FOUNDATION ANALYSIS.
3. THE FOUNDATION MUST BE DESIGNED FOR THE LOADS IMPOSED BY THE METAL BUILDING. FOUNDATION DESIGN LOADS MUST BE SHOWN ON THE DRAWINGS FOR VERIFICATION AND COORDINATION.
4. SITE SPECIFIC DESIGN CRITERIA INCLUDING DESIGN LOADS (DEAD, LIVE, COLLATERAL, WIND, SNOW, CRANE AND SEISMIC) AND THE RECOMMENDATIONS OF THE FOUNDATION REPORT (ALLOWABLE BEARING PRESSURES, TYPE OF FOUNDATION, SOIL DENSITY, AND LATERAL EARTH PRESSURE COEFFICIENTS). SHALL BE SHOWN ON THE CONTRACT DRAWINGS.
5. THE STRUCTURE IS CLASSIFIED AS ESSENTIAL PER AFM 88-3, CHAPTER 1.
6. SEE TYPE III STANDARD FOR DETAILS.
7. ITEMS INDICATED BY A "#" ARE TO BE DETERMINED BY THE DESIGNER.

US ARMY CORPS OF ENGINEERS
OMAHA DISTRICT

MARK	DESCRIPTION	DATE	APPR.

MARK	DESCRIPTION	DATE	APPR.

U. S. ARMY ENGINEER DISTRICT
CORPS OF ENGINEERS
OMAHA DISTRICT

DESIGNED BY: N.C.D. | DATE: JULY 2010
DWN BY: N.C.D. | CKD BY: B.M.K. | SOLICITATION NO.: Y
SUBMITTED BY: B.M.K. | CONTRACT NO.: Y
FILE NAME: 0D585-101.dwg | FILE NUMBER: X
SIZE: 33.1X22 | PLOT SCALE: 0'-0 3/64" | PLOT DATE: 7/21/2010

DOD, STANDARDS
PRESSURIZED HYDRANT DIRECT FUELING SYSTEM

STRUCTURAL NOTES &
MISCELLANEOUS DETAILS

SHEET IDENTIFICATION NUMBER
S-101

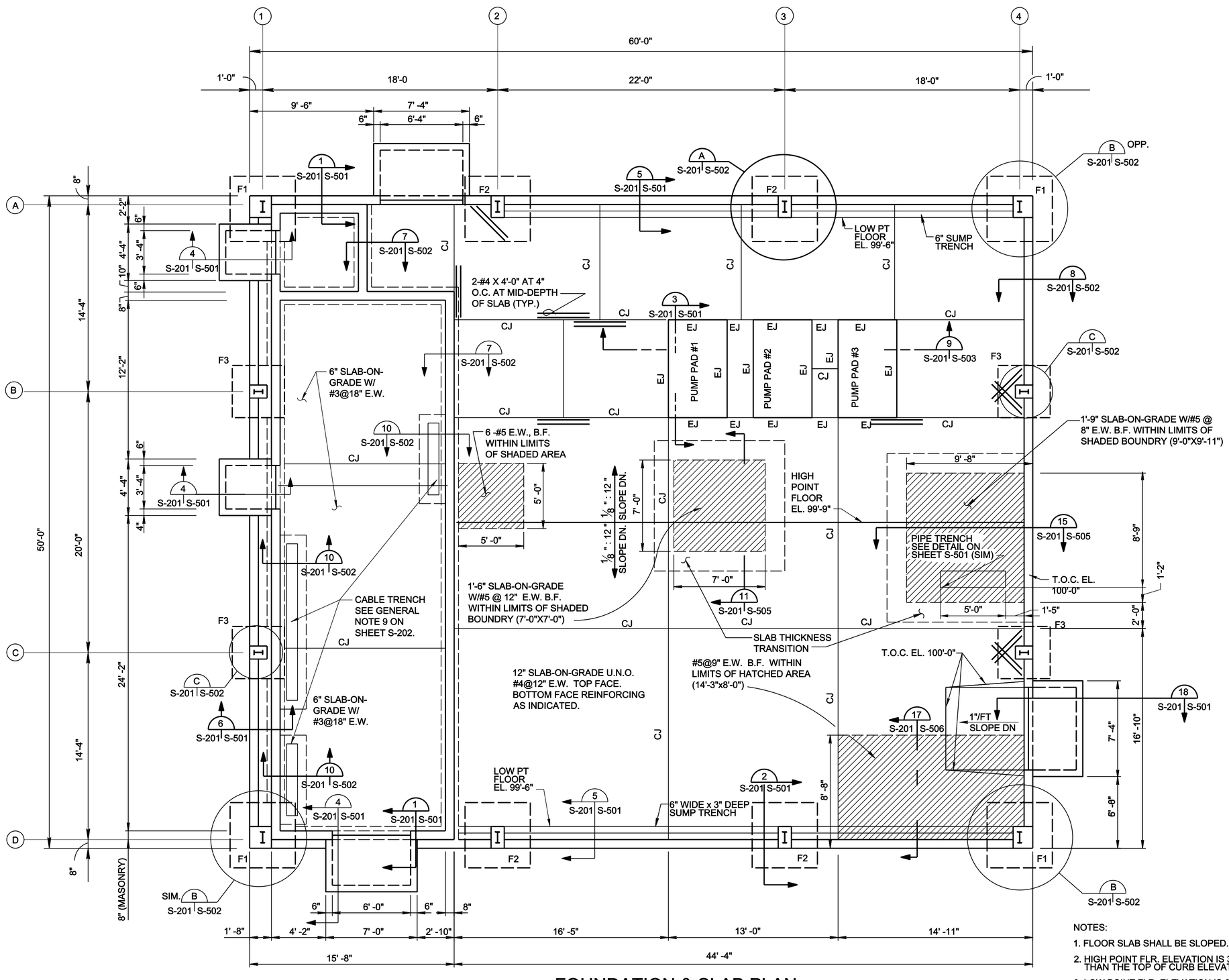

FOUNDATION & SLAB PLAN

SCALE: 1/4" = 1'-0"

NOTES:

1. FLOOR SLAB SHALL BE SLOPED.
2. HIGH POINT FLR. ELEVATION IS 3" LOWER THAN THE TOP OF CURB ELEVATION.
3. LOW POINT FLR. ELEVATION IS 6" LOWER THAN THE TOP OF CURB ELEVATION.

FOOTING SCHEDULE

MARK	FOOTINGS SIZE	FOOTINGS REINFORCING	BOTTOM OF FOOTING ELEVATION	PIERS - SEE SEC. 2 ON SHT. S-501 SIZE	PIERS REINFORCING	PIERS TIES	TOP OF PIER ELEVATION
F1	5'-0"X5'-0"X12"	5-#5 E.W., BOT.	#'-#"	20"X20"	10#5 VERT. BARS	#3 TIES	100'-0"
F2	5'-0"X5'-0"X12"	5-#5 E.W., BOT.	#'-#"	12"X20"	10#5 VERT. BARS	#3 TIES	100'-0"
F3	4'-0"X4'-0"X12"	4-#5 E.W., BOT.	#'-#"	12"X16"	4#7 VERT. BARS	#3 TIES	100'-0"

US ARMY CORPS OF ENGINEERS
OMAHA DISTRICT

MARK	DESCRIPTION	DATE	APPR.

MARK	DESCRIPTION	DATE	APPR.

U. S. ARMY ENGINEER DISTRICT
CORPS OF ENGINEERS
OMAHA DISTRICT

DESIGNED BY: N.C.D. | DATE: JULY 2010
DWN BY: N.C.D. | CKD BY: B.K.H. | SOLICITATION NO.: Y
SUBMITTED BY: B.K.H. | CONTRACT NO.: Y
FILE NAME: auto_shor1_design | FILE NUMBER: X
SIZE: 33.1X22 | PLOT SCALE: auto_scale | PLOT DATE: auto_sytime

DOD, STANDARDS
PRESSURIZED HYDRANT DIRECT FUELING SYSTEM

PUMPHOUSE
FOUNDATION & SLAB PLAN

SHEET IDENTIFICATION NUMBER
S-201

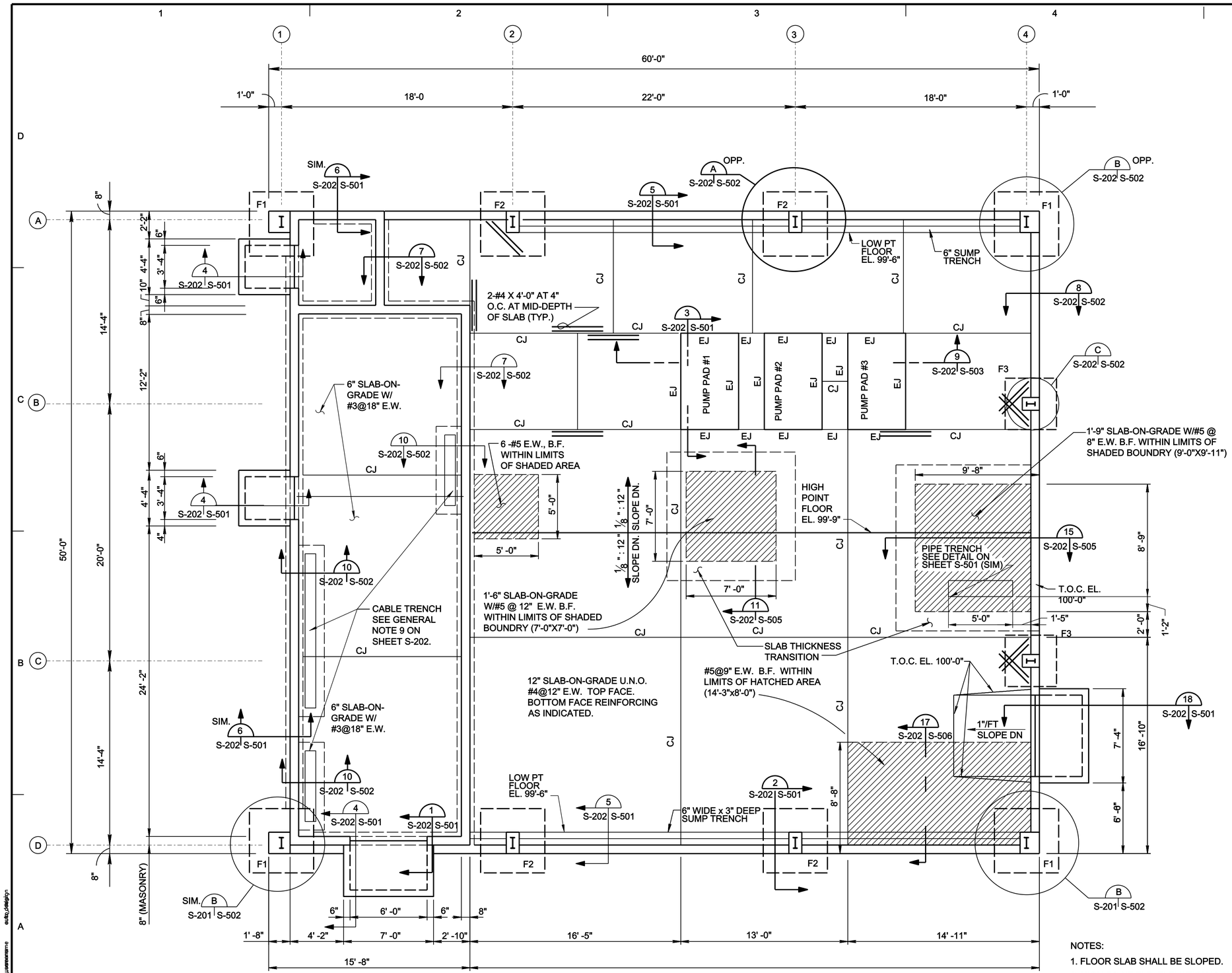

FOUNDATION & SLAB PLAN

SCALE: 1/4" = 1'-0"

NOTES:

1. FLOOR SLAB SHALL BE SLOPED.
2. HIGH POINT FLR. ELEVATION IS 3" LOWER THAN THE TOP OF CURB ELEVATION.
3. LOW POINT FLR. ELEVATION IS 6" LOWER THAN THE TOP OF CURB ELEVATION.

FOOTING SCHEDULE

MARK	FOOTINGS SIZE	FOOTINGS REINFORCING	BOTTOM OF FOOTING ELEVATION	PIERS - SEE SEC. 2 ON SHT. S-501 SIZE	PIERS REINFORCING	PIERS TIES	TOP OF PIER ELEVATION
F1	5'-0"X5'-0"X12"	5-#5 E.W., BOT.	#'-#"	20"X20"	10#5 VERT. BARS	#3 TIES	100'-0"
F2	5'-0"X5'-0"X12"	5-#5 E.W., BOT.	#'-#"	12"X20"	10#5 VERT. BARS	#3 TIES	100'-0"
F3	4'-0"X4'-0"X12"	4-#5 E.W., BOT.	#'-#"	12"X16"	4#7 VERT. BARS	#3 TIES	100'-0"

US ARMY CORPS OF ENGINEERS
OMAHA DISTRICT

MARK	DESCRIPTION	DATE	APPR.

MARK	DESCRIPTION	DATE	APPR.

U. S. ARMY ENGINEER DISTRICT
CORPS OF ENGINEERS
OMAHA DISTRICT

DESIGNED BY: N.C.D. | DATE: JULY 2010
DWN BY: N.C.D. | CKD BY: B.N.H. | SOLICITATION NO.: Y
SUBMITTED BY: R.A.K. | CONTRACT NO.: Y
FILE NAME: au10_s_sht1_design | FILE NUMBER: X
SIZE: 33.1X22 | PLOT SCALE: au10_scale | PLOT DATE: au10_sylime

DOD, STANDARDS
PRESSURIZED HYDRANT DIRECT FUELING SYSTEM

PUMP SHELTER
FOUNDATION & SLAB PLAN

SHEET IDENTIFICATION NUMBER
S-202

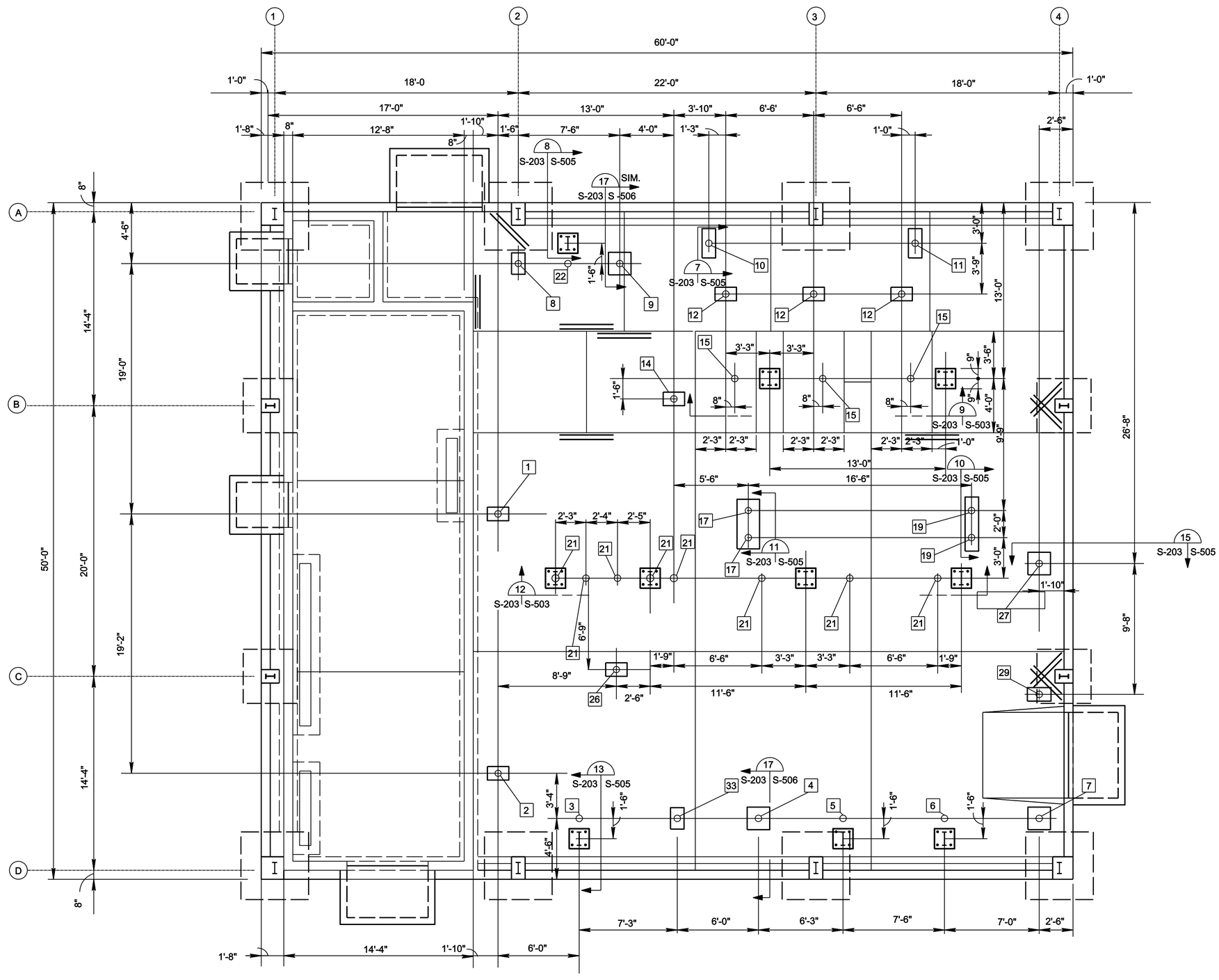

PIPE SUPPORT PLAN

4' 2' 0 4'

SCALE: 1/4" = 1'-0"

NOTE:

1. THE PIPE SUPPORT PLAN IS THE SAME FOR THE PUMPHOUSE & THE PUMP SHELTER.
2. ENSURE THAT THE PIPE SUPPORTS AND PIPES DO NOT INTERFERE WITH THE BUILDING COLUMNS AND/OR THEIR PEDESTALS.

US ARMY CORPS OF ENGINEERS
OMAHA DISTRICT

MARK	DESCRIPTION	DATE	APPR.

MARK	DESCRIPTION	DATE	APPR.

U. S. ARMY ENGINEER DISTRICT
CORPS OF ENGINEERS
OMAHA DISTRICT

DESIGNED BY: N.C.D. | DATE: JULY 2010
DWN BY: N.C.D. | CKD BY: B.K.H. | SOLICITATION NO.: Y
SUBMITTED BY: B.K.H. | CONTRACT NO.: X
FILE NAME: auto_short_design | FILE NUMBER: X
SIZE: 33.1X22 | PLOT SCALE: auto_scale | PLOT DATE: auto_systime

DOD STANDARDS
PRESSURIZED HYDRANT DIRECT FUELING SYSTEM

PIPE SUPPORT PLAN

SHEET IDENTIFICATION NUMBER
S-203

PIPE SUPPORTS SCHEDULE

PIPE SUPPORT *	PIPE DIAMETER	℄ PIPE ELEVATION	PIERS			BOTTTOM FACE REINFORCING BENEATH PIER @ 12" O.C. (U.N.O)		PIPE SUPPORT TYPE (SEE DETAILS ON SHT S-506)	REMARKS
			SIZE	VERTICAL REINF.	TIES	LENGTH	REINFORCING		
1	8"	110'-0"	19"x12"	6-#7	#3 @ 12"	5'-0" E.W. SEE PLAN	6-#5 E.W.	A	SEE SECTION 7 ON SHT. S-505
2	8"	110'-0"	19"x12"	6-#7	#3 @ 12"	5'-0" E.W. SEE PLAN	6-#5 E.W.	A	SEE SECTION 7 ON SHT. S-505
3	8"	110'-0" 102'-6"	18"x18"		1-#3	4'-0" E.W.	4-#5 E.W.	B	SEE SECTION 8 ON SHT. S-505
4	8"	102'-6"	20"x20"	12-#7	#3 @ 12"	4'-0" E.W.	4-#5 E.W.	C	SEE SECTION 17 ON SHT. S-506
5	4" 2"	102'-6" 104'-0"	18"x18"		1-#3	SEE PLAN	#5 @ 9"E.W.	B	SEE SECTION 13 ON SHT. S-505
6	6" 2"	102'-6" 104'-0"	18"x18"		1-#3	4'-0" E.W.	4-#5 E.W.	B	SEE SECTION 13 ON SHT. S-505
7	8"	102'-6"	20"x20"	12-#7	#3 @ 12"	SEE PLAN	#5 @ 9" E.W.	C	SEE SECTION 17 ON SHT. S-506
8	8"	101'-6"	19"x12"	6-#7	#3 @ 12"	4'-0" E.W.	4-#5 E.W.	A	SEE SECTION 7 ON SHT. S-505
9	8"	101'-6"	20"x20"	12-#7	#3 @ 12"	4'-0" E.W.	4-#5 E.W.	C	SEE SECTION 17 ON SHT. S-506 (SIM.)
10	12"	SEE NOTE 1	26"x12"	6-#7	#3 @ 12"	4'-0" E.W.	4-#5 E.W.	A	SEE SECTION 7 ON SHT. S-505
11	12"	SEE NOTE 1	26"x12"	6-#7	#3 @ 12"	4'-0" E.W.	4-#5 E.W.	A	SEE SECTION 7 ON SHT. S-505
12	8"	SEE NOTE 1	19"x12"	6-#7	#3 @ 12"	4'-0" E.W.	4-#5 E.W.	A	SEE SECTION 7 ON SHT. S-505
14	8"	108'-0"	19"x12"	6-#7	#3 @ 12"	4'-0" E.W.	4-#5 E.W.	A	SEE SECTION 7 ON SHT. S-505
15	6"	108'-0"	18"x18"		1-#3		#5 @ 8" O.C.	A (SIM.)	SEE SECTION 9 ON SHT. S-503
17	8"	108'-0"	44"x20"	24-#7	#3@14"	7'-0" E.W. SEE PLAN	8-#5 E.W.	C	SEE SECTION 11 ON SHT. S-505
19	8"	108'-0"	48"x12"	12-#7	#3 @ 12"	5'-0"X4'0" SEE PLAN	#5 @ 12" O.C.	A	SEE SECTION 10 ON SHT. S-505
21	6" & 8" 6"	108'-0" SEE NOTE 2	18"x18"		1-#3	4'-0" E.W.	4-#5 E.W.	B	SEE SECTION 12 ON SHT. S-503
22	8" 8"	101'-6" 103'-6"	18"x18"		1-#3	4'-0" E.W.	4-#5 E.W.	B	SEE SECTION 8 ON SHT S-505
26	8"	108'-0"	19"x12"	6-#7	#3 @ 12"	4'-0" E.W.	4-#5 E.W.	A	SEE SECTION 7 ON SHT. S-505
27	6"	108'-1"	20"x20"	12-#7	#3 @ 14"	SEE PLAN	15-#5 E.W.	C	SEE SECTION 15 ON SHT. S-505
29	6"	108'-1"	19"x12"	6-#7	#3 @ 12"	4'-0" E.W.	4-#5 E.W.	A	SEE SECTION 7 ON SHT. S-505
33	8"	102'-6"	19"x12"	6-#7	#3 @ 12"	4'-0" E.W.	4-#5 E.W.	A	SEE SECTION 7 ON SHT. S-505

PIPE SUPPORT NOTES:

1. CENTERLINE ELEVATION SET BY PUMP, APPROX. 101'-6". NOT TO EXCEED 102'-0". COORDINATE WITH PUMP MANUFACTURER.
2. CENTERLINE ELEVATION SET BY FILTER/SEPARATOR. COORDINATE WITH FILTER/SEPARATOR MANUFACTURER.
3. ENSURE THAT THE PIPE SUPPORTS AND PIPES DO NOT INTERFERE WITH THE BUILDING COLUMNS AND/OR THEIR PEDESTALS.

US ARMY CORPS OF ENGINEERS
OMAHA DISTRICT

MARK	DESCRIPTION	DATE	APPR.

MARK	DESCRIPTION	DATE	APPR.

U. S. ARMY ENGINEER DISTRICT
CORPS OF ENGINEERS
OMAHA DISTRICT

DESIGNED BY: N.C.D.
DATE: JULY 2010
DWN BY: N.C.D.
CKD BY: B.M.K.
SOLICITATION NO.: Y
SUBMITTED BY: B.M.K.
CONTRACT NO.: X
FILE NAME: auto_short_design
FILE NUMBER: x
SIZE: 33.1X22
PLOT SCALE: auto_scale
PLOT DATE: auto_sytime

DOD STANDARDS
PRESSURIZED HYDRANT DIRECT FUELING SYSTEM

PIPE SUPPORT SCHEDULE

SHEET IDENTIFICATION NUMBER
S-204

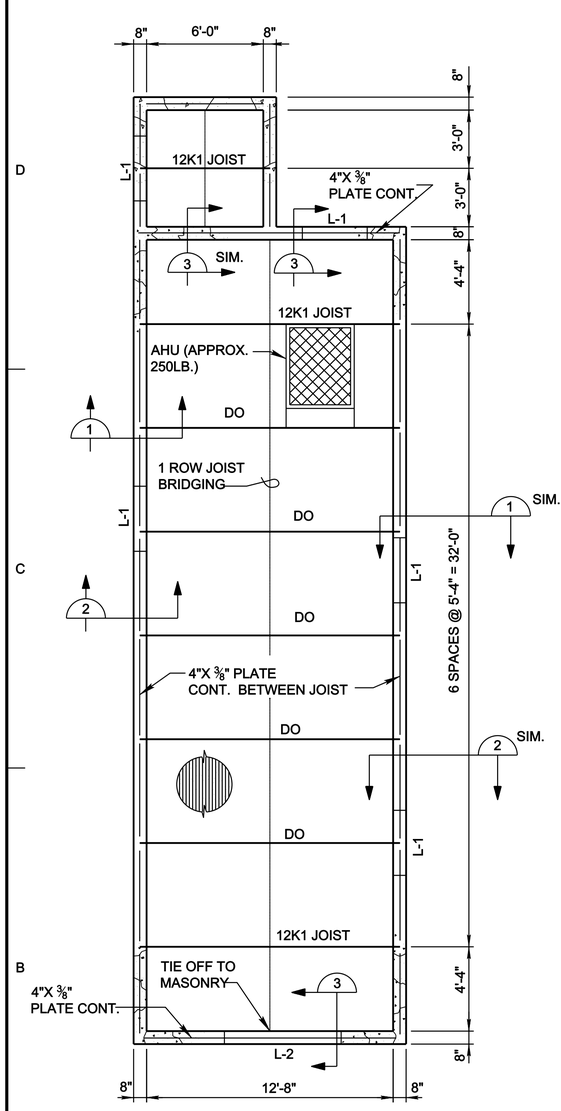

ROOF FRAMING PLAN (PUMPHOUSE)

4' 2' 0 4'

SCALE: 1/4" = 1'-0"

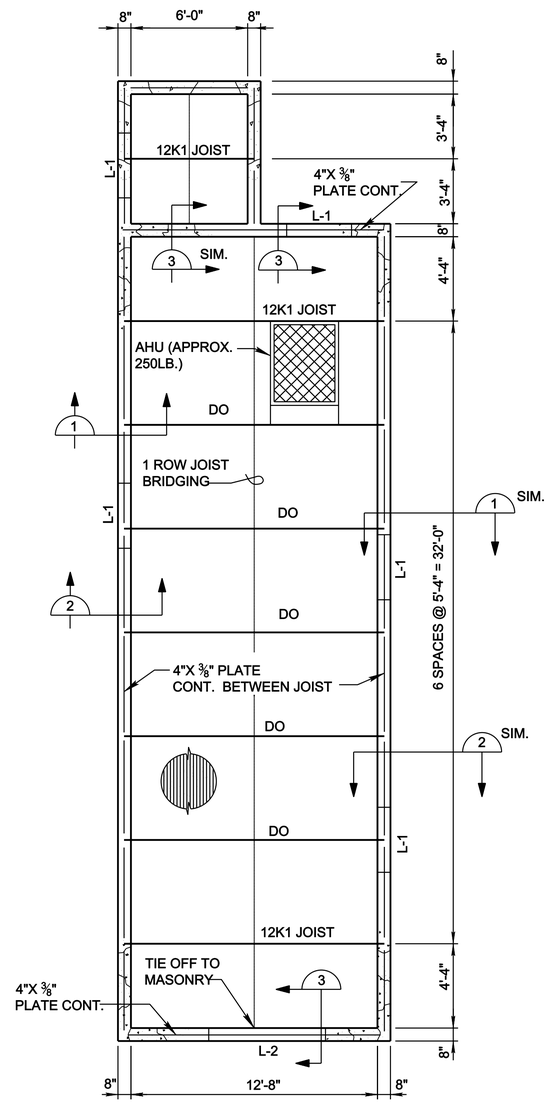

ROOF FRAMING PLAN (PUMP SHELTER)

4' 2' 0 4'

SCALE: 1/4" = 1'-0"

NOTE:
CONTRACTOR SHALL DESIGN AND PROVIDE FRAMING FOR JOIST SUPPORTED EQUIPMENT AND SHALL SUBMIT THE DESIGNS FOR APPROVAL. SEE SHEET MH-502 FOR TYPICAL SEISMIC BRACING

L-# MASONRY LINTEL
SEE DETAILS ON S-803

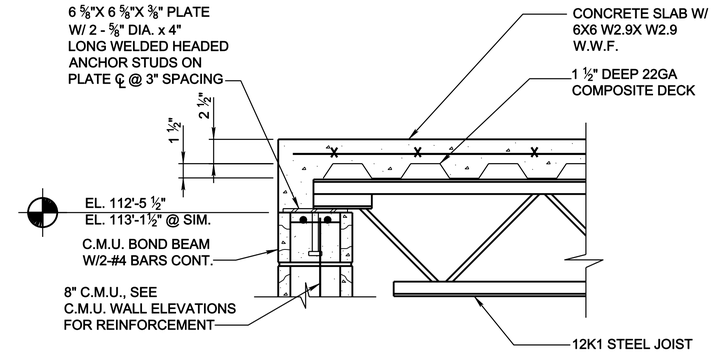

SECTION 1

1' 6" 0 1'

SCALE: 1-1/2" = 1'-0"

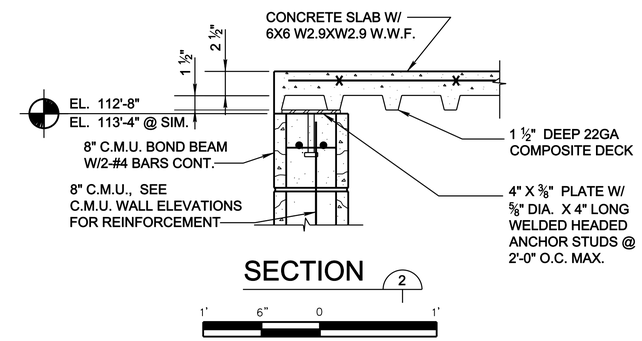

SECTION 2

1' 6" 0 1'

SCALE: 1-1/2" = 1'-0"

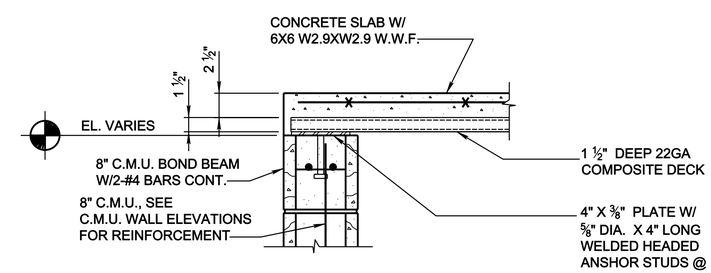

SECTION 3

1' 6" 0 1'

SCALE: 1-1/2" = 1'-0"

COMPOSITE STEEL DECK MATERIAL SCHEDULE								
DECK TYPE	MINIMUM THICKNESS	MIN. YIELD STREN.	MIN. SECTION PROPERTIES			MIN. SHEET WIDTH	MIN. SHEET LENGTH	DECK FINISH
			I +	S +	S -			
1 ½" DEEP COMPOSITE	0.0295 IN.	33 KSI	0.149 IN^4/FT	0.181 IN^3/FT	0.181 IN^3/FT	36"	3 OR MORE SPANS	GALVANIZED

COMPOSITE STEEL DECK FASTENER SCHEDULE	
FASTENER LOCATION	FASTENER REQUIREMENT
DECK TO JOISTS DECK TO WALL PLATES	⅝" MINIMUM DIAMETER PUDDLE WELD AT 12" O.C. MAXIMUM (36/4 PATTERN)
DECK SIDE LAPS	1 ¼" SEAM WELD OR EQUIVALENT MECHANICAL FASTENER PER DECK SPAN

US ARMY CORPS OF ENGINEERS
OMAHA DISTRICT

MARK	DESCRIPTION	DATE	APPR.

MARK	DESCRIPTION	DATE	APPR.

U. S. ARMY ENGINEER DISTRICT
CORPS OF ENGINEERS
OMAHA DISTRICT

DESIGNED BY: N.C.D. | DATE: JULY 2010
DWN BY: N.C.D. | CKD BY: B.K.H. | SOLICITATION NO.: Y
SUBMITTED BY: B.K.H. | CONTRACT NO.: Y
FILE NAME: auto_short_design | FILE NUMBER: X
SIZE: 33.1X22 | PLOT SCALE: auto_scale | PLOT DATE: auto_sytime

DOD STANDARDS
PRESSURIZED HYDRANT DIRECT FUELING SYSTEM

CONTROL ROOM ROOF
PLANS, SECTIONS, AND DETAILS

SHEET IDENTIFICATION NUMBER
S-301

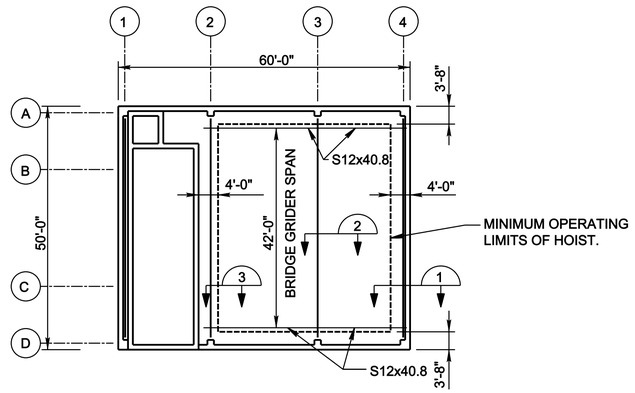

BRIDGE GIRDER LOCATION PLAN

16' 8' 0 16'

SCALE: 1/16" = 1'-0"

BRIDGE CRANE NOTES

1. CRANE TYPE: HAND CHAIN DRIVEN UNDERHUNG BRIDGE CRANE
2. HOIST TYPE: HAND GEARED TROLLY HOIST
3. CAPACITY: 1 TON (2000 LBS.)
4. SERVICE CLASSIFICATION: CLASS A (INFREQUENT SERVICE)
5. HOOK HEIGHT: 11'-6" (MIN. CLEARANCE TO LOW POINT OF FINISHED FLOOR)
6. ALL ENDS OF RUNWAY BEAMS SHALL BE PROTECTED BY END STOPS. THE BRIDGE CRANE SHALL BE PROVIDED WITH RUBBER BUMPERS TO MATE WITH THE END STOPS.
7. MINIMUM HEADROOM HOIST OR COPED BRIDGE BEAM SHALL BE UTILIZED AS REQUIRED TO MEET HOOK HEIGHT AND CLEARANCE REQUIREMENTS. COORDINATE WITH METAL BUILDING MANUFACTURER FOR DIMENSIONS OF METAL BUILDING FRAME.
8. COORDINATE CONNECTION FOR RUNWAY BEAMS TO RIGID FRAME WITH METAL BUILDING MANUFACTURER.

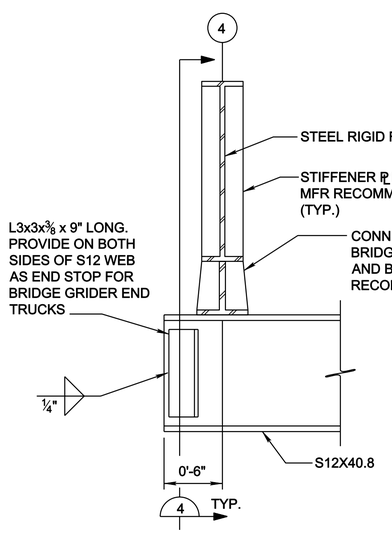

SECTION 1

1' 6" 0 1'

SCALE: 1-1/2" = 1'-0"

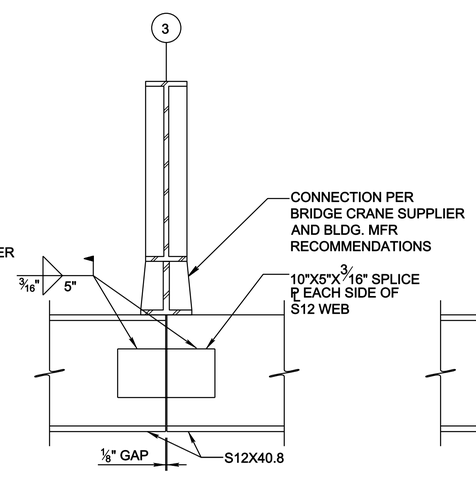

SECTION 2

1' 6" 0 1'

SCALE: 1-1/2" = 1'-0"

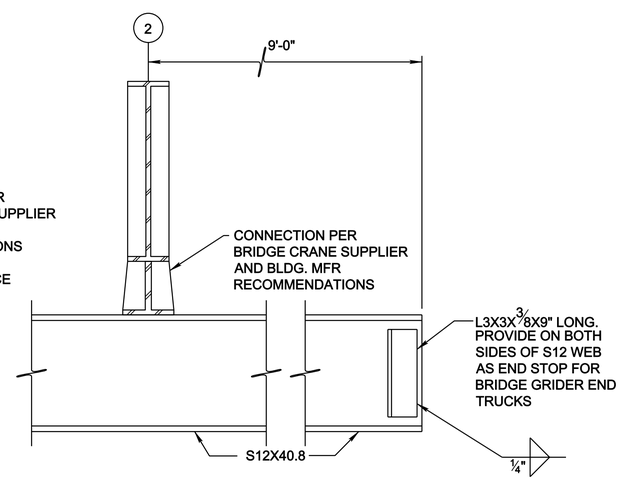

SECTION 3

1' 6" 0 1'

SCALE: 1-1/2" = 1'-0"

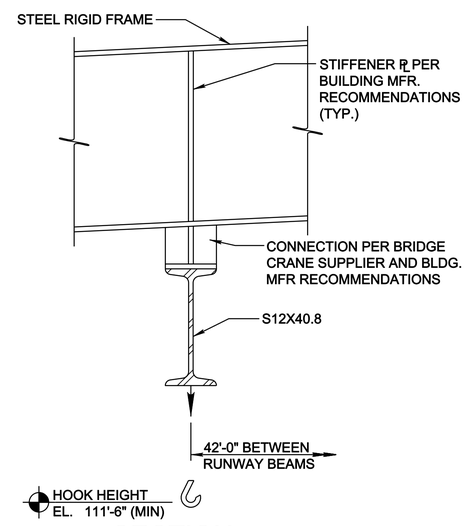

SECTION 4

1' 6" 0 1'

SCALE: 1-1/2" = 1'-0"

US ARMY CORPS
OF ENGINEERS
OMAHA DISTRICT

MARK	DESCRIPTION	DATE	APPR.

MARK	DESCRIPTION	DATE	APPR.

U. S. ARMY ENGINEER DISTRICT
CORPS OF ENGINEERS
OMAHA DISTRICT

DESIGNED BY: N.C.D. | DATE: JULY 2010
DWN BY: N.C.D. | CKD BY: B.K.H. | SOLICITATION NO.: Y
SUBMITTED BY: B.K.H. | CONTRACT NO.: Y
FILE NAME: auto_short_design | FILE NUMBER: X
SIZE: 33.1X22 | PLOT SCALE: auto_scale | PLOT DATE: auto_sytime

DOD, STANDARDS
PRESSURIZED HYDRANT DIRECT FUELING SYSTEM

BRIDGE CRANE PLAN AND DETAILS

SHEET
IDENTIFICATION
NUMBER
S-302

auto_design
auto_usersname

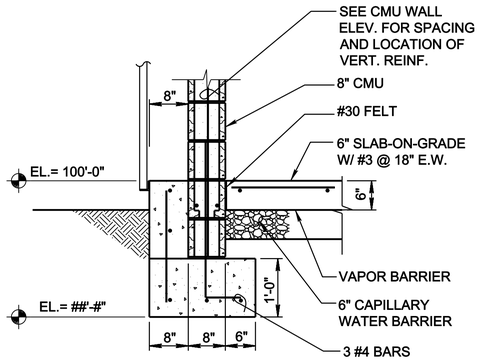

SECTION 1 S-201 S-501 S-202

SCALE: 3/4" = 1'-0"

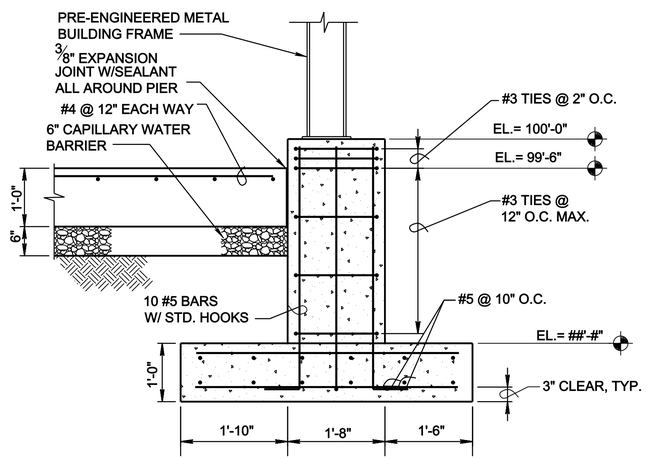

SECTION 2 S-201 S-501 S-202

SCALE: 3/4" = 1'-0"

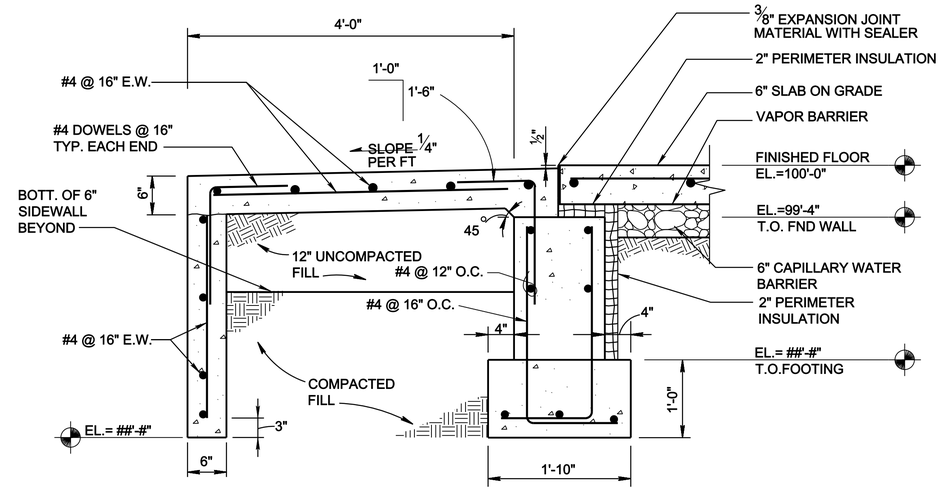

SECTION 4 S-201 S-501 S-202

SCALE: 1" = 1'-0"

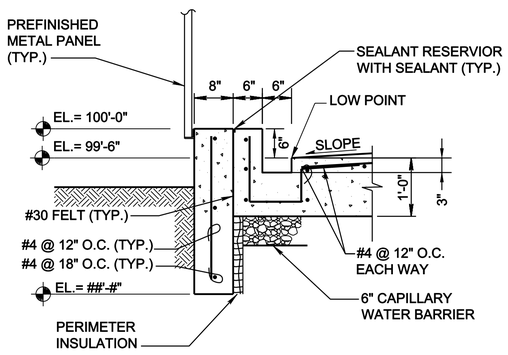

SECTION 5 S-201 S-501 S-202

SCALE: 3/4" = 1'-0"

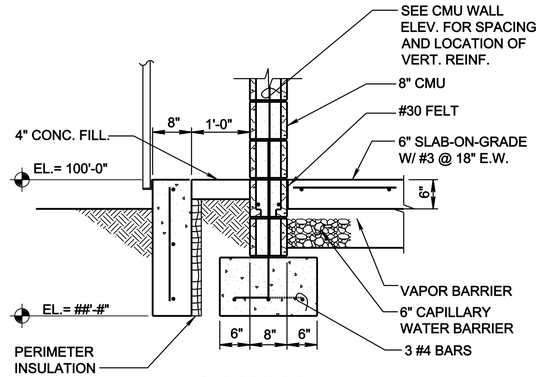

SECTION 6 S-201 S-501 S-202

SCALE: 3/4" = 1'-0"

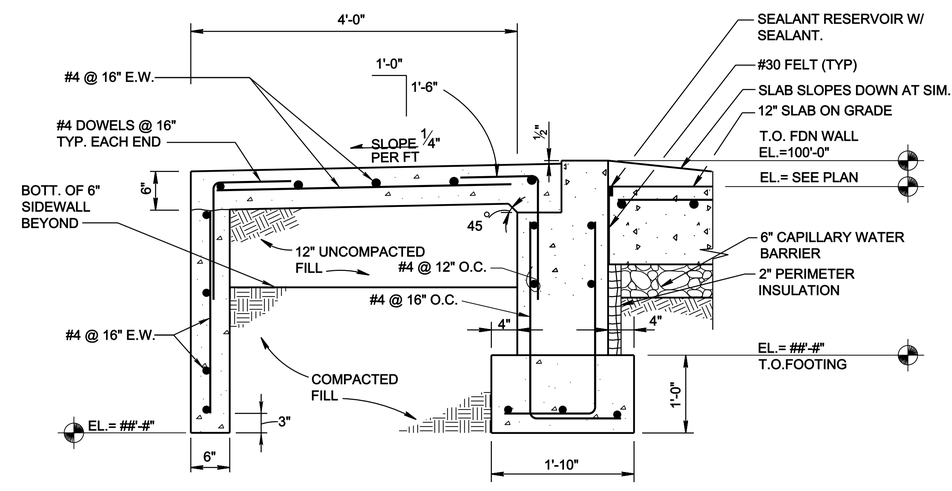

SECTION 18 S-201 S-501 S-202

SCALE: 1" = 1'-0"

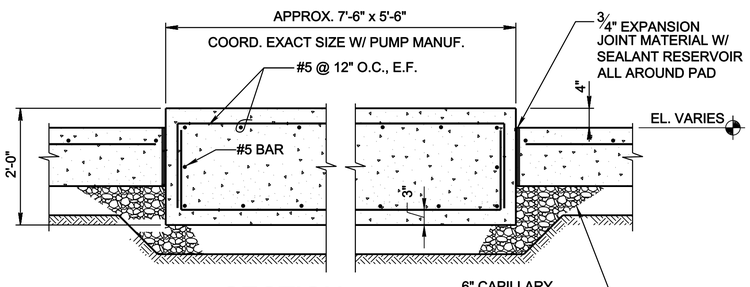

SECTION 3 S-201 S-501 S-202

SCALE: 3/4" = 1'-0"

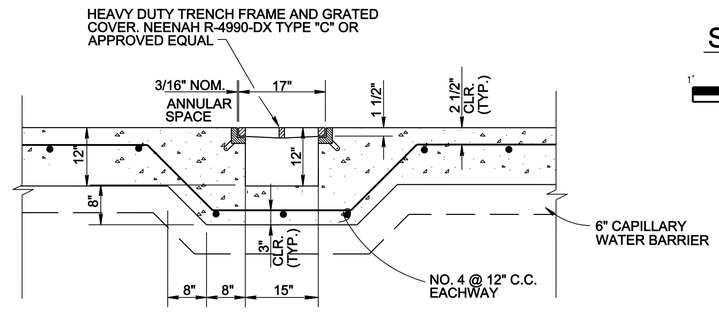

PIPE TRENCH DETAIL

NO SCALE

US ARMY CORPS OF ENGINEERS
OMAHA DISTRICT

MARK	DESCRIPTION	DATE	APPR.

MARK	DESCRIPTION	DATE	APPR.

U. S. ARMY ENGINEER DISTRICT
CORPS OF ENGINEERS
OMAHA DISTRICT

DESIGNED BY: N.C.D. | DATE: JULY 2010
DWN BY: N.C.D. | CKD BY: B.K.H. | SOLICITATION NO.: Y
SUBMITTED BY: S.M.T. | CONTRACT NO.: X
FILE NAME: auto_short_design | FILE NUMBER: X
SIZE: 33.1X22 | PLOT SCALE: auto_scale | PLOT DATE: auto_sytime

DOD, STANDARDS:
PRESSURIZED HYDRANT DIRECT FUELING SYSTEM

FOUNDATION AND SLAB SECTIONS & DETAILS
SHEET 1 OF 2

SHEET IDENTIFICATION NUMBER
S-501

auto_designer
auto_usersession

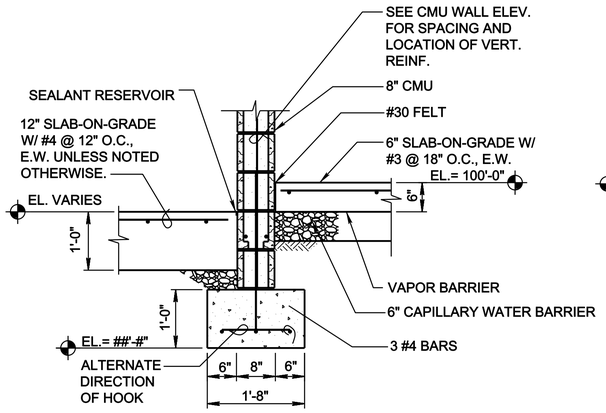

SECTION 7 S-201 S-202 | S-502

SCALE: 3/4" = 1'-0"

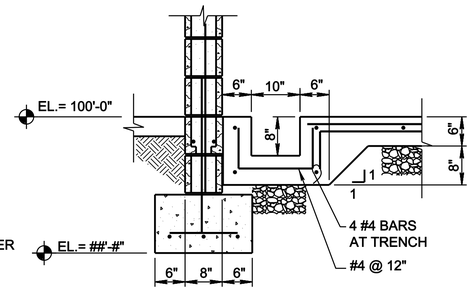

NOTE: SEE SECTIONS 6 AND 7 FOR ADDITIONAL INFORMATION.

SECTION 10 S-201 S-202 | S-502

SCALE: 3/4" = 1'-0"

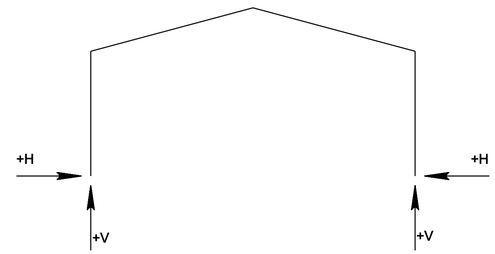

FRAME REACTIONS, KIPS				
LOAD COMB.	COLUMN LINES 2 & 3		COLUMN LINES 1 & 4	
	H	V	H	V
1	#.#	#.#	#.#	#.#
2	#.#	#.#	#.#	#.#

LOAD COMBINATIONS

1. DEAD + COLLATERAL + LIVE + MIN. CRANE
2. DEAD + COLLATERAL + LIVE + MAX. CRANE

NOTES TO THE DESIGNER:

FOUNDATION DESIGN

1. THE FOUNDATION MUST BE DESIGNED FOR THE LOADS IMPOSED BY THE METAL BUILDING. FOUNDATION DESIGN LOADS MUST BE SHOWN ON THE DRAWING FOR VERIFICATION.
2. PLAN AND DETAILS SHOWN ARE FOR A TYPICAL INSTALLATION. THE FOUNDATION MUST BE DESIGNED FOR SITE SPECIFIC CRITERIA INCLUDING DESIGN LOADS (DEAD, LIVE, COLLATERAL, WIND, SNOW, CRANE AND SEISMIC) AND THE RECOMMENDATIONS OF THE FOUNDATION REPORT (ALLOWABLE BEARING PRESSURES, TYPE OF FOUNDATION, SOIL DENSITY, AND LATERAL EARTH PRESSURE COEFFICIENTS).
3. BOTTOM OF FOOTING ELEVATION AND SLAB SUBGRADE PREPARATION SHALL BE AS RECOMMENDED BY THE FINAL FOUNDATION REPORT.

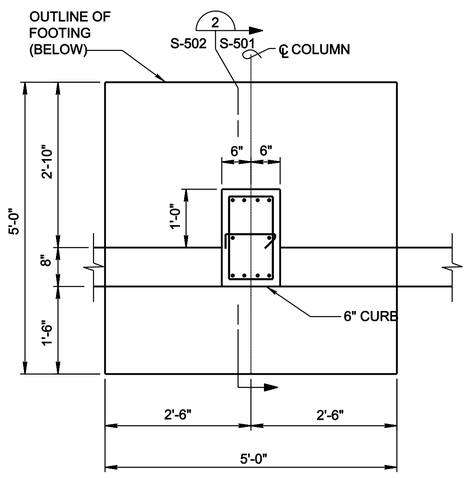

INTERIOR PILASTER DETAIL A S-201 S-202 | S-502

SCALE: 3/4" = 1'-0"

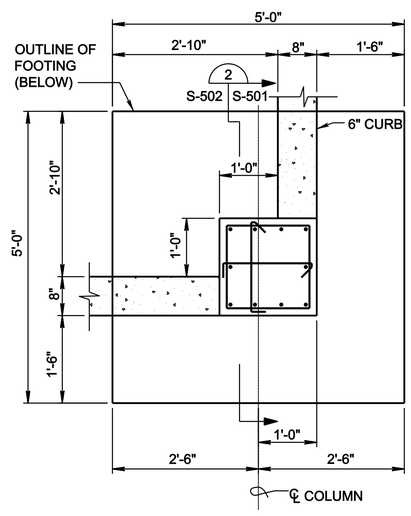

CORNER PILASTER DETAIL B S-201 S-202 | S-502

SCALE: 3/4" = 1'-0"

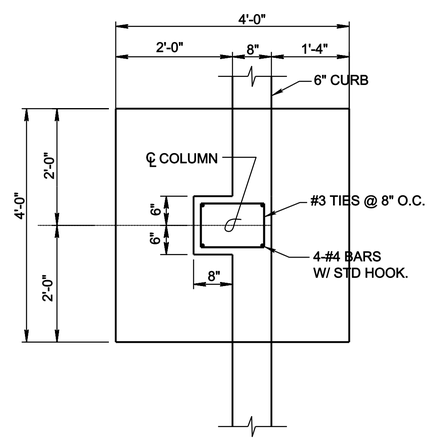

DETAIL C S-201 S-202 | S-502

SCALE: 3/4" = 1'-0"

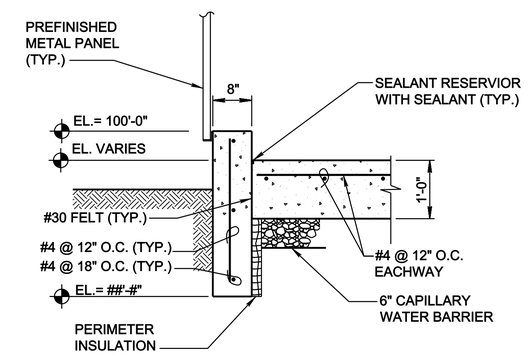

SECTION 8 S-201 S-202 | S5-502

SCALE: 3/4" = 1'-0"

US ARMY CORPS OF ENGINEERS
OMAHA DISTRICT

MARK	DESCRIPTION	DATE	APPR.

MARK	DESCRIPTION	DATE	APPR.

U. S. ARMY ENGINEER DISTRICT
CORPS OF ENGINEERS
OMAHA DISTRICT

DESIGNED BY: N.C.D. | DATE: JULY 2010
DWN BY: N.C.D. | CKD BY: B.M.K. | SOLICITATION NO.: Y
SUBMITTED BY: B.M.K. | CONTRACT NO.: Y
FILE NAME: C0J3BS~502.dwg | FILE NUMBER: X
SIZE: 33.1X22 | PLOT SCALE: 0'-0 3/64" ;" / mm | PLOT DATE: 7/21/2010

DOD, STANDARDS
PRESSURIZED HYDRANT DIRECT FUELING SYSTEM

FOUNDATION AND SLAB
SECTIONS & DETAILS
SHEET 2 OF 2

SHEET IDENTIFICATION NUMBER
S-502

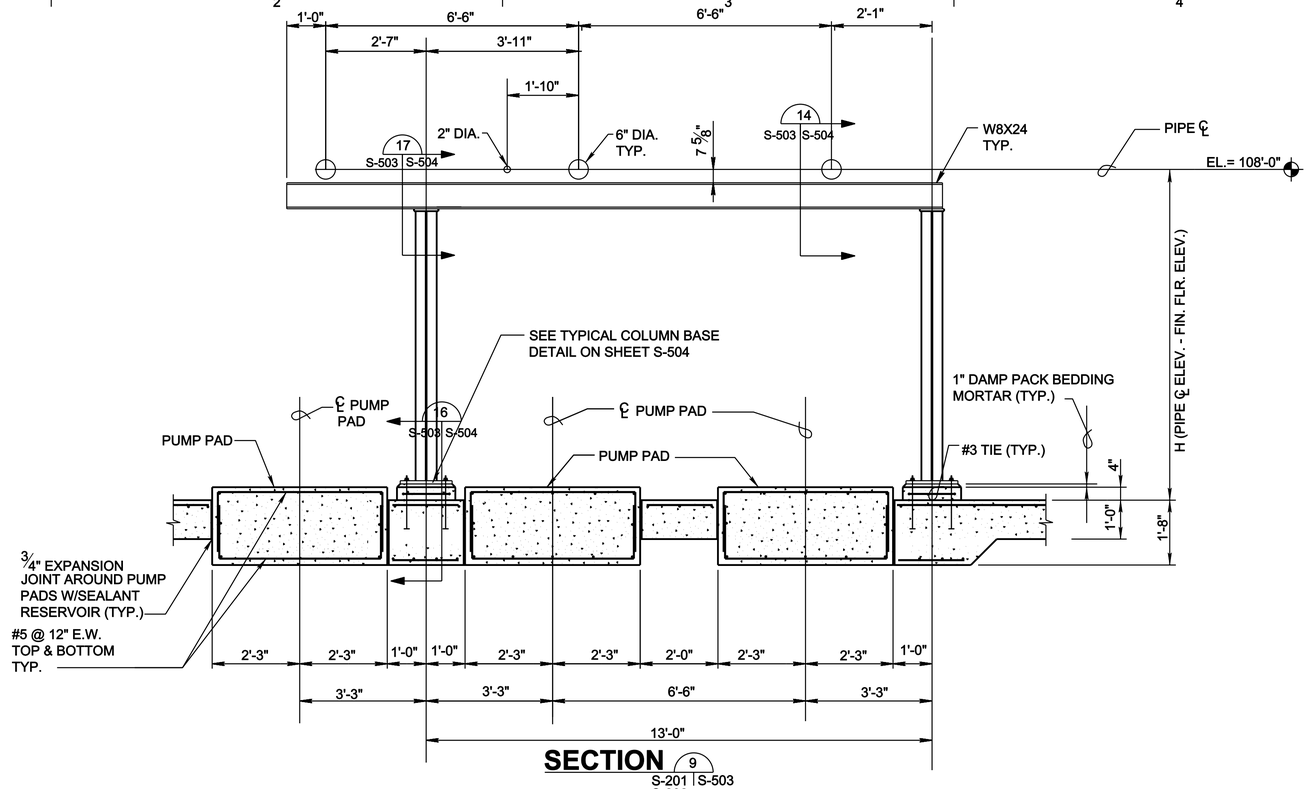

SECTION 9 S-201 S-503 S-202 S-203

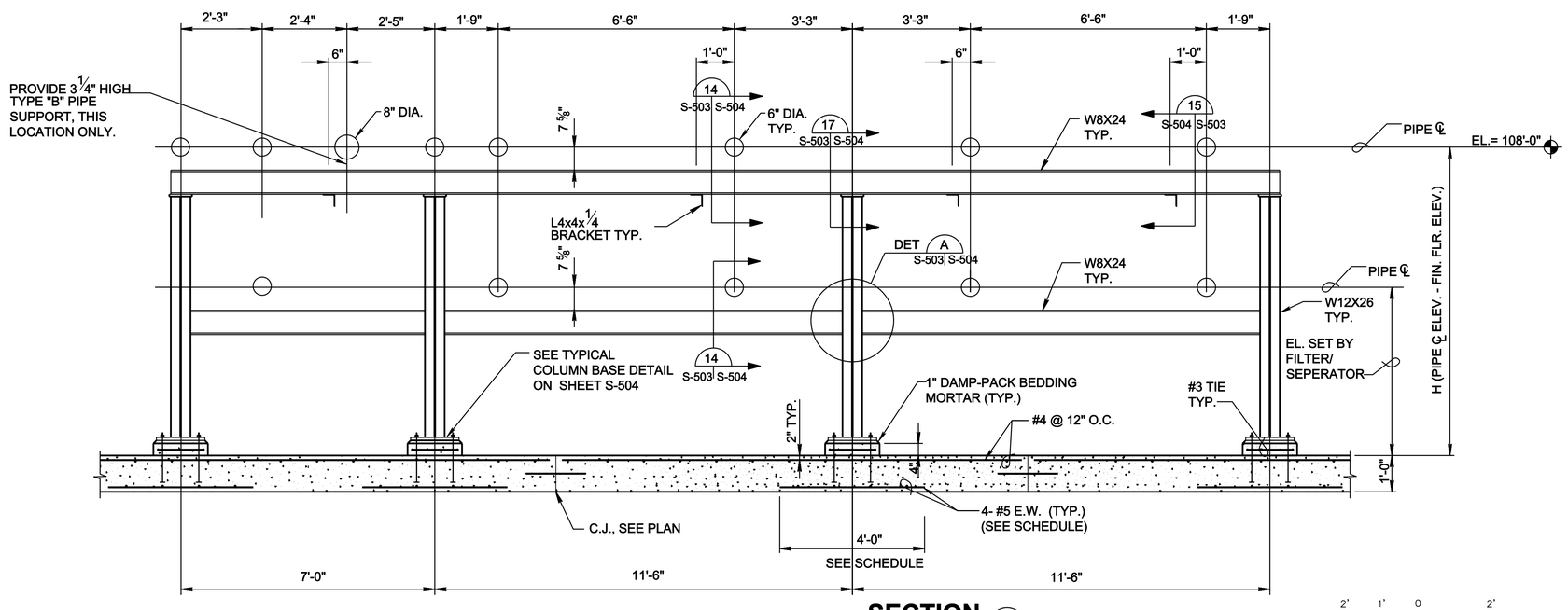

SECTION 12 S-203 S-503

2' 1' 0 2'

SCALE: 1/2" = 1'-0"

US ARMY CORPS OF ENGINEERS
OMAHA DISTRICT

MARK	DESCRIPTION	DATE	APPR.

MARK	DESCRIPTION	DATE	APPR.

U. S. ARMY ENGINEER DISTRICT
CORPS OF ENGINEERS
OMAHA DISTRICT

DESIGNED BY: N.C.D.
DWN BY: N.C.D.
CKD BY: B.N.H.
SUBMITTED BY: B.N.H.
FILE NAME: 0D38S-503.dwg
SIZE: 33.1X22
PLOT SCALE: 0'-0 3/64" ':" / mm
DATE: JULY 2010
SOLICITATION NO.: Y
CONTRACT NO.: Y
FILE NUMBER: X
PLOT DATE: 7/21/2010

DOD, STANDARDS
PRESSURIZED HYDRANT DIRECT FUELING SYSTEM

PIPE SUPPORT SECTIONS AND DETAILS
SHEET 1 OF 4

SHEET IDENTIFICATION NUMBER
S-503

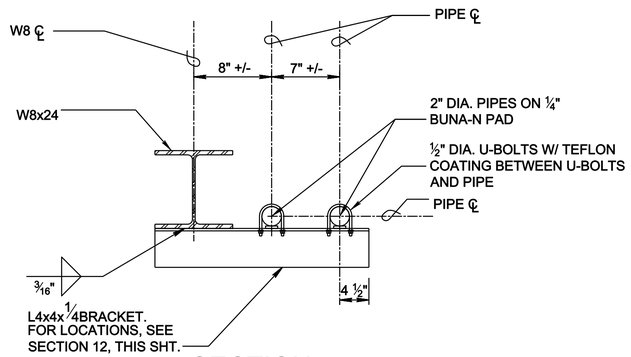

SECTION 15 S-503 | S-504

1' 6" 0 1'

SCALE: 1-1/2" = 1'-0"

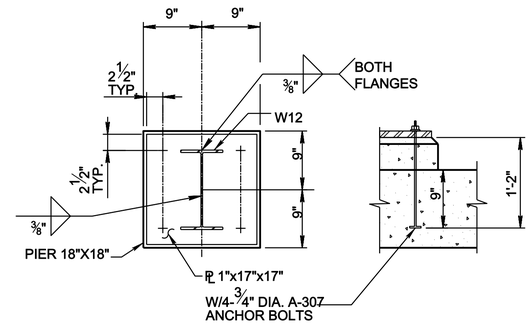

TYPICAL COLUMN BASE

FOR PS-9 & PS-12 ON SHEET S-503

1' 0 1' 2'

SCALE: 1" = 1'-0"

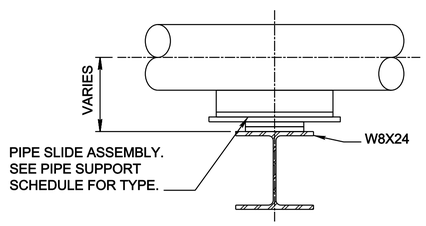

SECTION 14 S-503 | S-504 S-505

1' 6" 0 1'

SCALE: 1-1/2" = 1'-0"

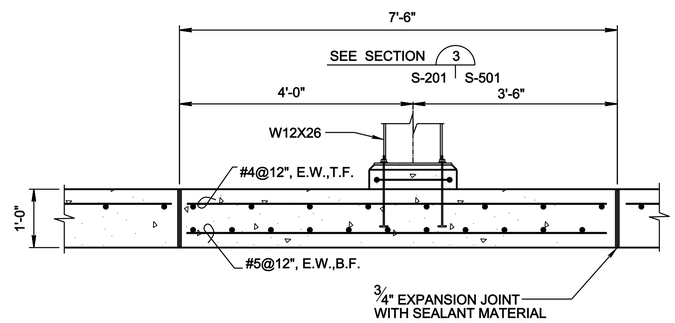

SECTION 16 S-503 | S-504

2' 1' 0 2'

SCALE: 3/4" = 1'-0"

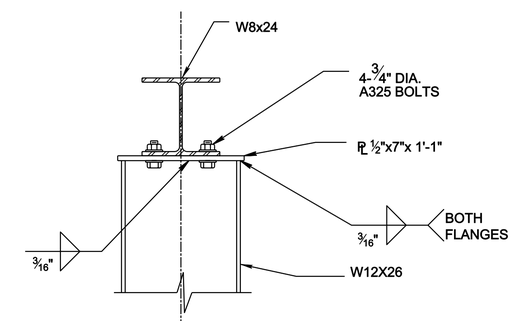

SECTION 17 S-503 | S-504

1' 6" 0 1'

SCALE: 1-1/2" = 1'-0"

US ARMY CORPS OF ENGINEERS
OMAHA DISTRICT

MARK	DESCRIPTION	DATE	APPR.

MARK	DESCRIPTION	DATE	APPR.

U. S. ARMY ENGINEER DISTRICT
CORPS OF ENGINEERS
OMAHA DISTRICT

DESIGNED BY: N.C.D.
DWN BY: N.C.D.
CKD BY: B.N.H.
SUBMITTED BY: B.N.H.
FILE NAME: auto_short_design
SIZE: 33.1X22
PLOT SCALE: auto_scale
DATE: JULY 2010
SOLICITATION NO.: Y
CONTRACT NO.: Y
FILE NUMBER: X
PLOT DATE: auto_sytime

DOD, STANDARDS
PRESSURIZED HYDRANT DIRECT FUELING SYSTEM

PIPE SUPPORT SECTIONS AND DETAILS
SHEET 2 OF 4

SHEET IDENTIFICATION NUMBER
S-504

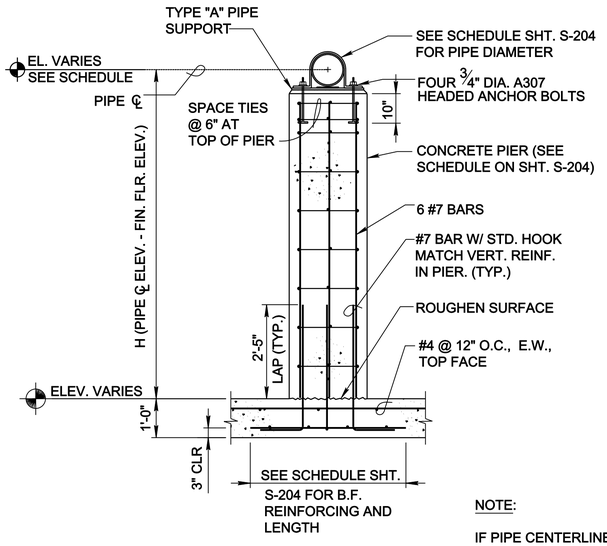

SECTION 7 S-203 S-505

SCALE: 1/2" = 1'-0"

NOTE:

IF PIPE CENTERLINE ELEVATION IS LESS THAN 104'-0" PROVIDE #7 DOWELS WITH STD. HOOK CONTINUOUS TO TOP OF PIER. DO NOT PROVIDE #7 VERT. BARS.

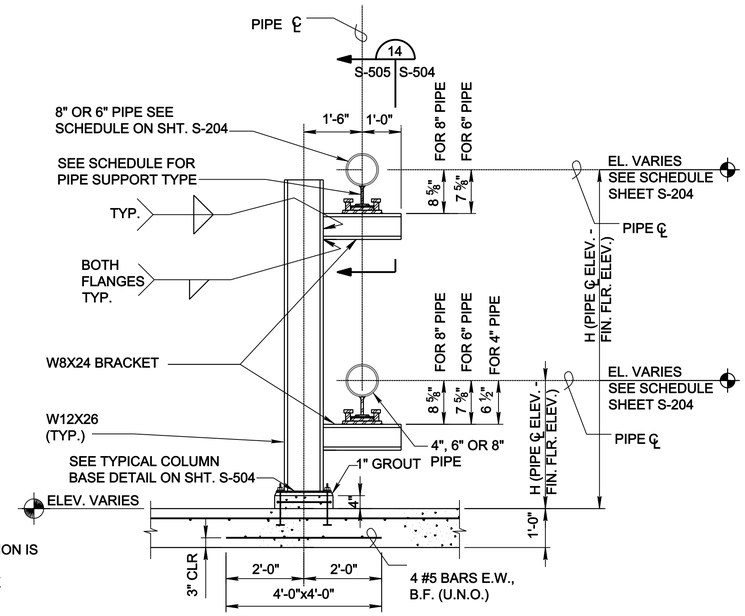

SECTION 8 S-203 S-505

NO SCALE

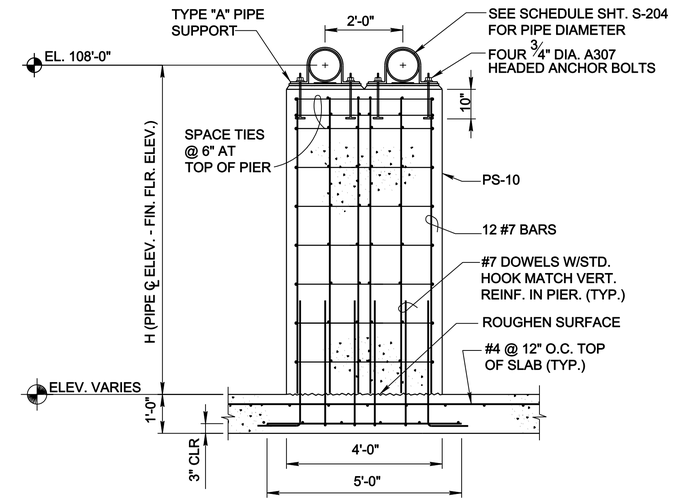

SECTION 10 S-203 S-505

SCALE: 1/2" = 1'-0"

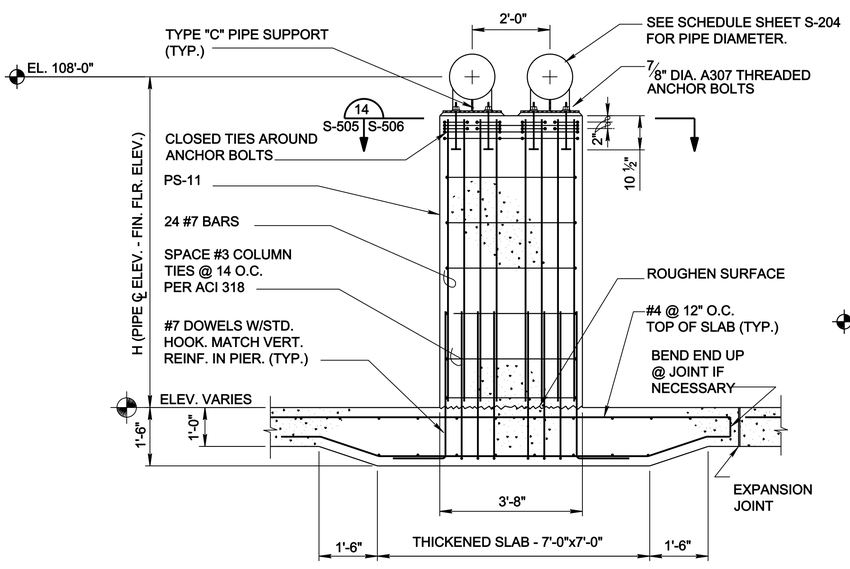

SEE SCHEDULE SHEET S-204 FOR B.F. REINFORCING AND LENGTH

SECTION 11 S-201 S-505 S-203

SCALE: 1/2" = 1'-0"

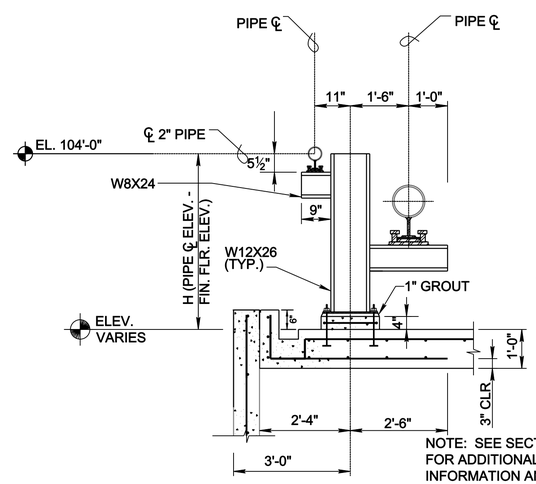

NOTE: SEE SECTION 8 S-203 S-505 FOR ADDITIONAL INFORMATION AND DIMENSIONS

SECTION 13 S-203 S-505

NO SCALE

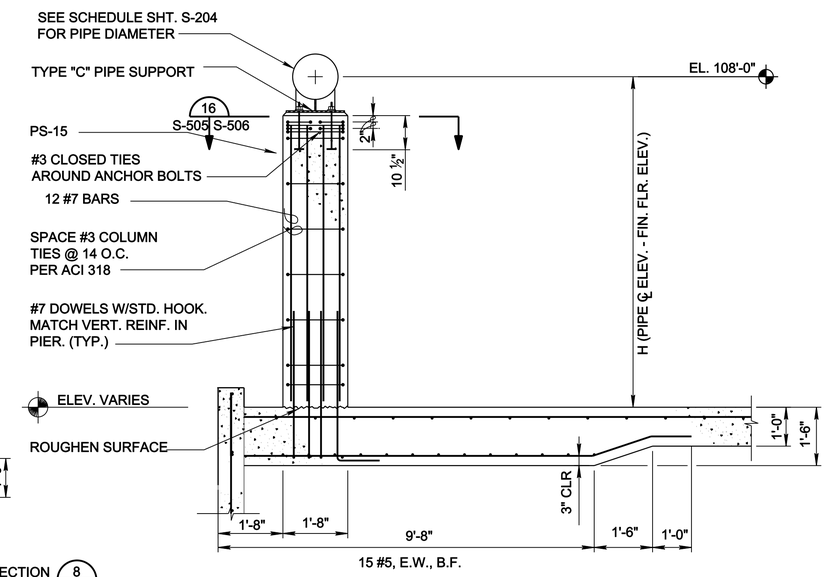

SECTION 15 S-201 S-505 S-203

SCALE: 1/2" = 1'-0"

US ARMY CORPS OF ENGINEERS
OMAHA DISTRICT

MARK	DESCRIPTION	DATE	APPR.

MARK	DESCRIPTION	DATE	APPR.

U. S. ARMY ENGINEER DISTRICT
CORPS OF ENGINEERS
OMAHA DISTRICT

DESIGNED BY: N.C.D. | DATE: JULY 2010
DWN BY: N.C.D. | CKD BY: B.M.H. | SOLICITATION NO.: Y
SUBMITTED BY: B.M.H. | CONTRACT NO.: Y
FILE NAME: OD585-505.dwg | FILE NUMBER: X
SIZE: 33.1X22 | PLOT SCALE: 0'-0 1/16" = 1'-0" | PLOT DATE: 7/21/2010

DOD, STANDARDS
PRESSURIZED HYDRANT DIRECT FUELING SYSTEM

PIPE SUPPORT SECTIONS AND DETAILS
SHEET 3 OF 4

SHEET IDENTIFICATION NUMBER
S-505

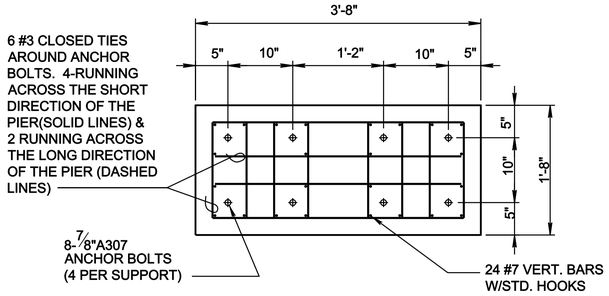

SECTION 14 S-505 | S-506

SCALE: 1" = 1'-0"

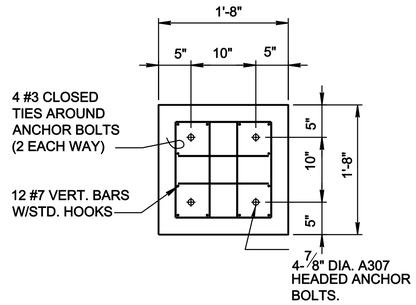

SECTION 16 S-505 | S-506

SCALE: 1" = 1'-0"

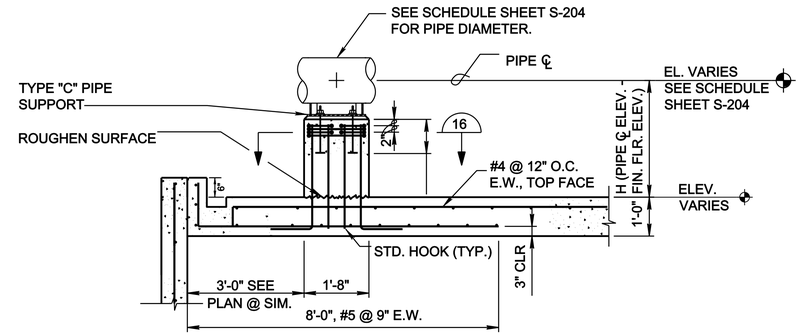

PS-7 ONLY, SEE SCHEDULE SHT. S-204
FOR B.F. REINFORCING FOR OTHER PIPE SUPPORTS.

SECTION 17 S-201 | S-506 S-203

SCALE: 1/2" = 1'-0"

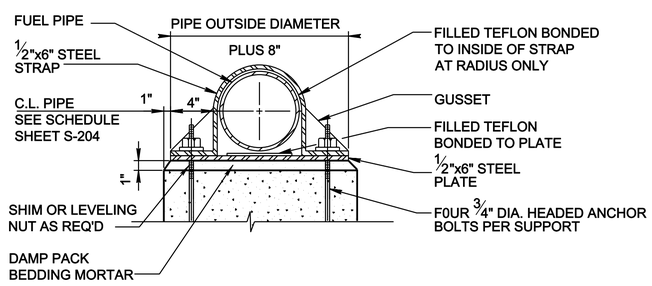

TYPE A

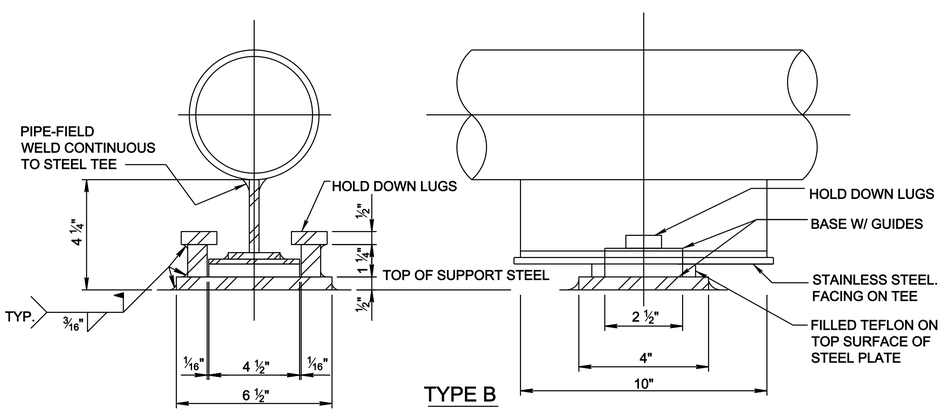

TYPE B

PIPE SUPPORT DETAILS

NO SCALE

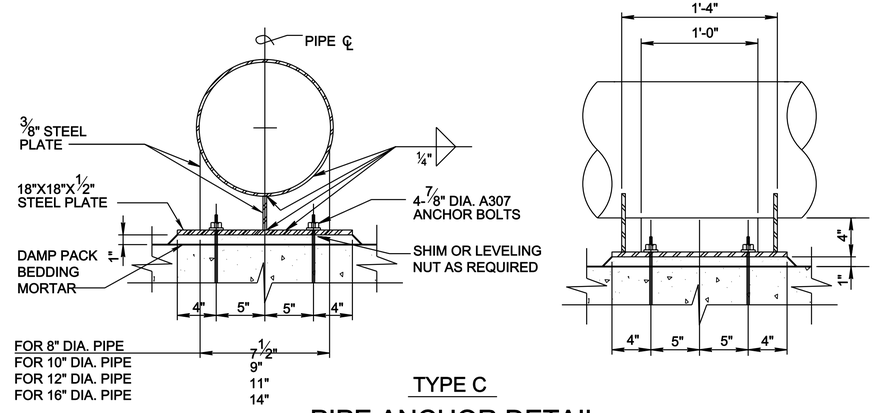

TYPE C

PIPE ANCHOR DETAIL

NO SCALE

PIPE SUPPORT NOTES (TYPE A, B, & C):

1. PROVIDE CARBON STEEL PIPE SUPPORTS, INCLUDING: STRAPS, PLATES GUIDES AND TEE'S WHERE CARBON STEEL PIPE IS USED. ALL CARBON STEEL ELEMENTS SHALL HAVE THE SAME MECHANICAL PROPERTIES PROVIDE STAINLESS STEEL PIPE SUPPORTS, INCLUDING: STRAPS, PLATES, GUIDES AND TEES WHERE STAINLESS STEEL PIPE IS USED. ALL STAINLESS STEEL ELEMENTS SHALL HAVE THE SAME MECHANICAL PROPERTIES. DO NOT WELD CARBON STEEL PLATES OR TEES TO STAINLESS STEEL PIPE.

US ARMY CORPS OF ENGINEERS
OMAHA DISTRICT

MARK	DESCRIPTION	DATE	APPR.

MARK	DESCRIPTION	DATE	APPR.

U. S. ARMY ENGINEER DISTRICT
CORPS OF ENGINEERS
OMAHA DISTRICT

DESIGNED BY: N.C.D. | DATE: JULY 2010
DWN BY: N.C.D. | CKD BY: B.K.H. | SOLICITATION NO.: Y
SUBMITTED BY: B.K.H. | CONTRACT NO.: Y
FILE NAME: OD.S05-506.dwg | FILE NUMBER: X
SIZE: 33.1X22 | PLOT SCALE: 0'-0 1/16" '-" / mm | PLOT DATE: 7/21/2010

DOD, STANDARDS
PRESSURIZED HYDRANT DIRECT FUELING SYSTEM

PIPE SUPPORT SECTIONS AND DETAILS
SHEET 4 OF 4

SHEET IDENTIFICATION NUMBER
S-506

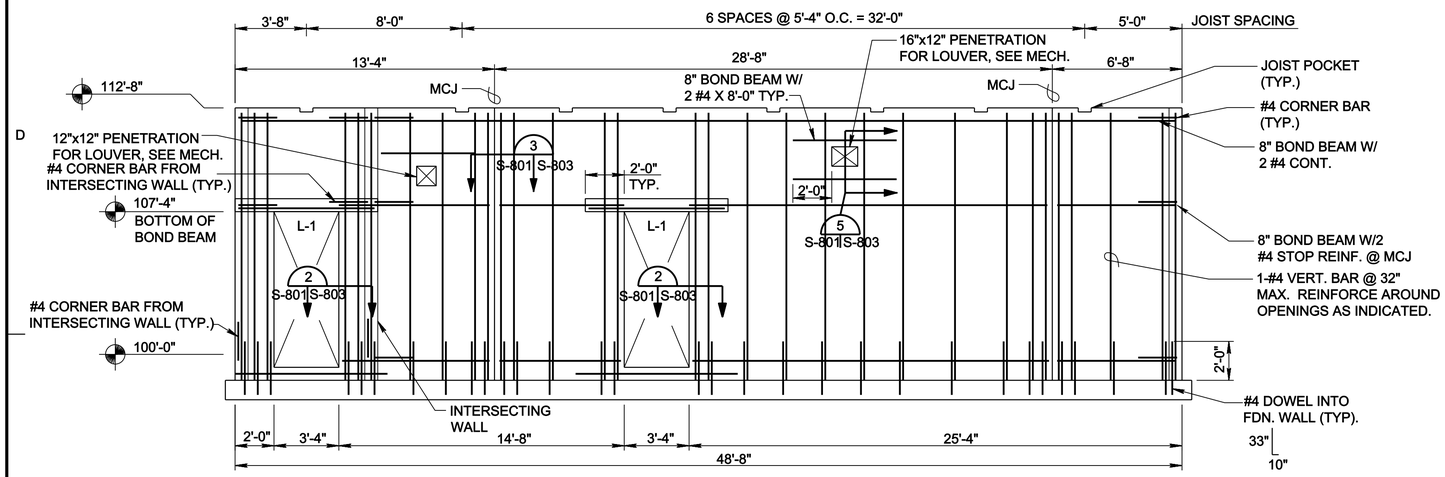

ELEVATION 1

SCALE: 1/4" = 1'-0"

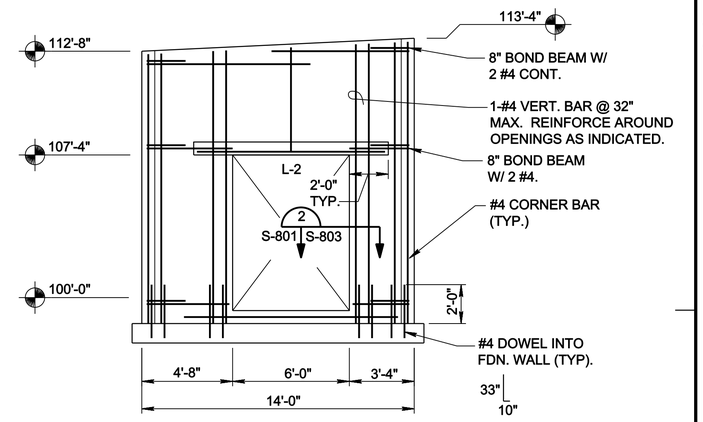

ELEVATION 2

SCALE: 1/4" = 1'-0"

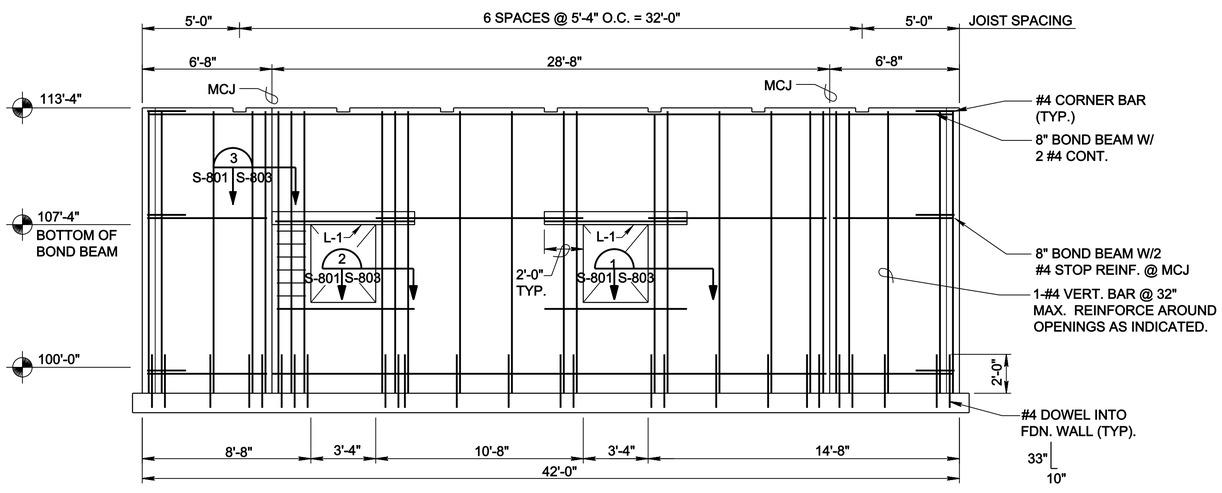

ELEVATION 3

SCALE: 1/4" = 1'-0"

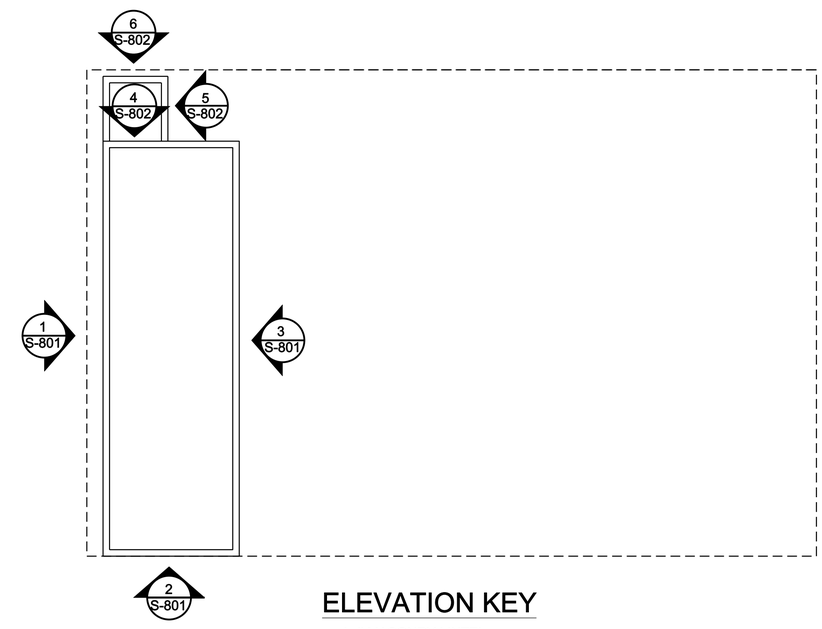

ELEVATION KEY

L-# MASONRY LINTEL
SEE DETAILS ON S-803

NOTES TO THE DESIGNER
1. REINFORCING SHOWN IS SUITABLE FOR A BASIC WIND SPEED OF 90 MPH (3-SECOND GUST) AND SEISMIC PARAMETERS: Ss <= 0.5 & S1 <= 0.2. REDESIGN AS REQUIRED TO SUIT SITE SPECIFIC CONDITIONS.
2. TOP OF FOOTING ELEVATIONS SHALL BE 98'-8" OR AS RECOMMENDED BY THE FINAL FOUNDATION REPORT.

US ARMY CORPS OF ENGINEERS
OMAHA DISTRICT

MARK	DESCRIPTION	DATE	APPR.

MARK	DESCRIPTION	DATE	APPR.

U. S. ARMY ENGINEER DISTRICT
CORPS OF ENGINEERS
OMAHA DISTRICT

DESIGNED BY: N.C.D.
DWN BY: N.C.D.
CKD BY: B.N.H.
SUBMITTED BY: B.N.H.
FILE NAME: auto_short_design
SIZE: 33.1X22
PLOT SCALE: auto_scale
DATE: JULY 2010
SOLICITATION NO.: Y
CONTRACT NO.: Y
FILE NUMBER: X
PLOT DATE: auto_sytime

DOD, STANDARDS
PRESSURIZED HYDRANT DIRECT FUELING SYSTEM

PUMPHOUSE
CONTROL ROOM MASONRY ELEVATIONS
SHEET 1 OF 2

SHEET IDENTIFICATION NUMBER
S-801

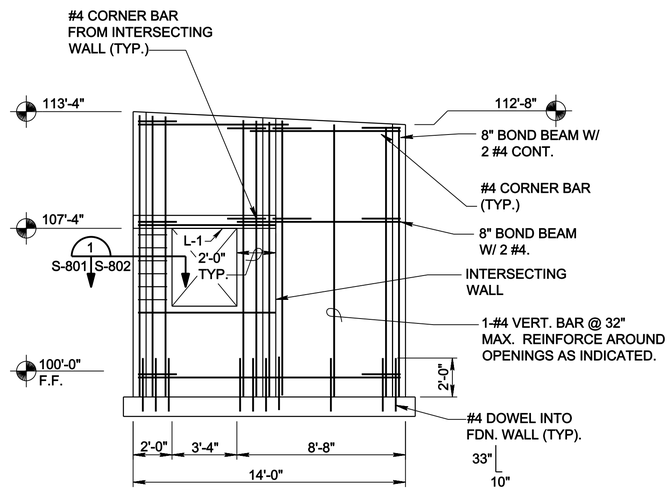

ELEVATION 4

4' 2' 0 4'

SCALE: 1/4" = 1'-0"

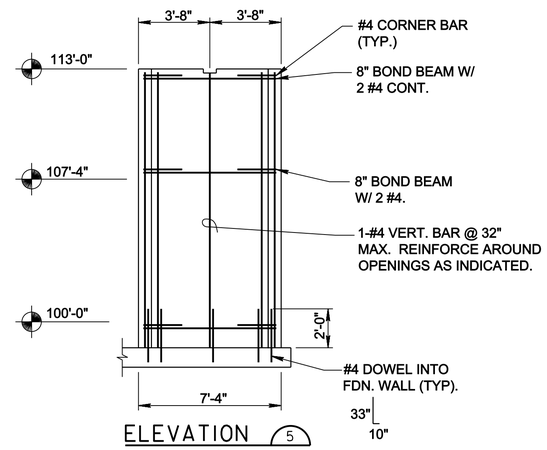

ELEVATION 5

4' 2' 0 4'

SCALE: 1/4" = 1'-0"

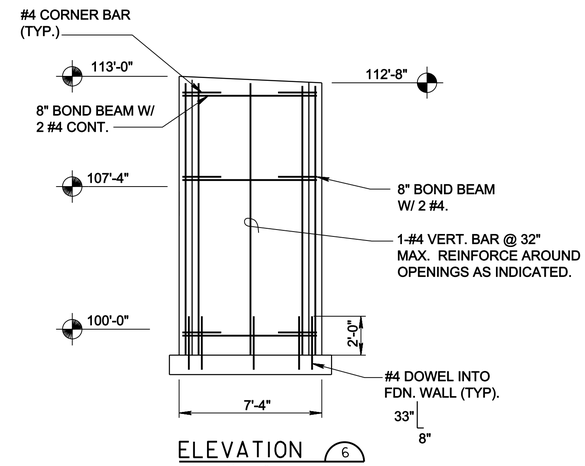

ELEVATION 6

4' 2' 0 4'

SCALE: 1/4" = 1'-0"

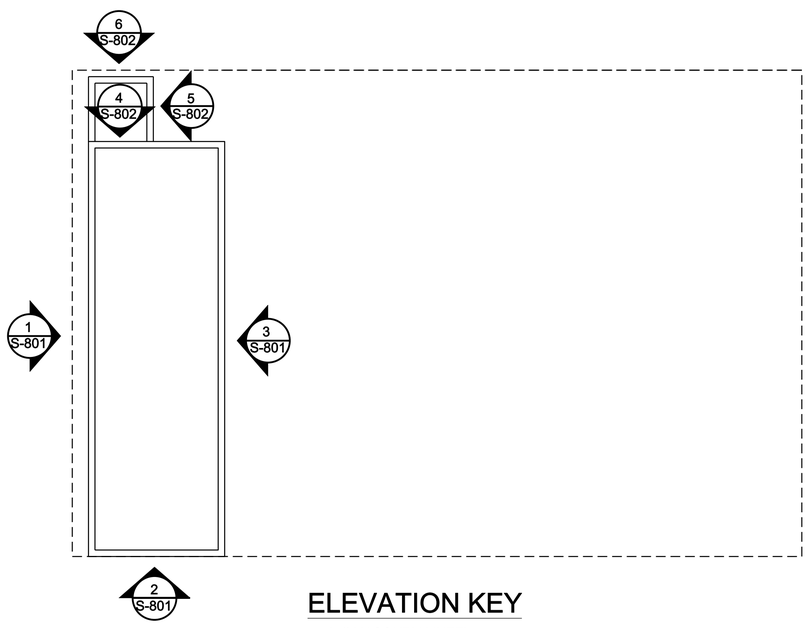

ELEVATION KEY

L-# MASONRY LINTEL
SEE DETAILS ON S-803

MASONRY NOTES:

1. REINFORCED MASONRY:
   A. DESIGN STRENGTH: f'm = 1500 PSI.
   B. CMU: ASTM C90, TYPE NORMAL WEIGHT
   C. MORTAR: ASTM C270 TYPE S,
      MINIMUM COMPRESSIVE STRENGTH f'c = 1800 PSI.
   D. REINFORCING BARS: ASTM A615
      SPECIFIED YIELD STRENGTH; Fy = 60 KSI, GRADE 60.
   E. GROUT: ASTM C476
      MINIMUM COMPRESSIVE STRENGTH, f'c = 2000 PSI AT 28 DAYS.

2. PROVIDE HORIZONTAL JOINT REINFORCEMENT (NOT SHOWN) AT 16" O.C.

3. PROVIDE VERTICAL REINFORCING CONSISTING OF #4 BARS AT 32" O.C. MAX. PROVIDE ADDITIONAL VERTICAL REINFORCING AT OPENINGS MASONRY CONTROL JOINTS AND CORNERS AS INDICATED ON WALL ELEVATIONS.

4. THE CONTRACTOR SHALL PROVIDE ADEQUATE TEMPORARY BRACING FOR ALL MASONRY WALLS DURING CONSTRUCTION.

5. USE 8 INCH DEEP LINTELS, THE THICKNESS OF THE WALLS, REINFORCED WITH 2-#4 BARS, AT OPENINGS WHERE LINTELS ARE NOT DETAILED. LINTEL REINFORCING SHALL EXTEND 48 BAR DIAMETERS (d) OR 2'-0" BEYOND OPENING, WHICHEVER IS GREATER.

6. STIRRUPS AND TIES SHALL EXTEND FROM THE CLOSEST HORIZONTAL COURSE JOINT ABOVE THE OPENING TO THE CLOSEST HORIZONTAL COURSE JOINT BELOW THE OPENING.

7. LAP SPLICES OF BARS TO BE 48 BAR DIAMETERS BUT NOT LESS THAN 24 INCHES.

MASONRY LAP BAR SCHEDULE

FOR 2000 PSI GROUT

LAP SPLICE LENGTH	
#4	24"
#5	30"
#6	36"

NOTES TO THE DESIGNER
1. REINFORCING SHOWN IS SUITABLE FOR A BASIC WIND SPEED OF 90 MPH (3-SECOND GUST) AND SEISMIC PARAMETERS: Ss <= 0.5 & S1 <= 0.2. REDESIGN AS REQUIRED TO SUIT SITE SPECIFIC CONDITIONS.
2. TOP OF FOOTING ELEVATIONS SHALL BE 98'-8" OR AS RECOMMENDED BY THE FINAL FOUNDATION REPORT.

US ARMY CORPS OF ENGINEERS
OMAHA DISTRICT

MARK	DESCRIPTION	DATE	APPR.

MARK	DESCRIPTION	DATE	APPR.

U. S. ARMY ENGINEER DISTRICT
CORPS OF ENGINEERS
OMAHA DISTRICT

DESIGNED BY: N.C.D. | DATE: JULY 2010
DWN BY: N.C.D. | CKD BY: B.K.H. | SOLICITATION NO.: Y
SUBMITTED BY: B.K.H. | CONTRACT NO.: Y
FILE NAME: auto_short_design | FILE NUMBER: X
SIZE: 33.1X22 | PLOT SCALE: auto_scale | PLOT DATE: auto_sytime

DOD, STANDARDS
PRESSURIZED HYDRANT DIRECT FUELING SYSTEM

PUMPHOUSE
CONTROL ROOM MASONRY ELEVATIONS
SHEET 2 OF 2

SHEET IDENTIFICATION NUMBER
S-802

auto_design
auto_user

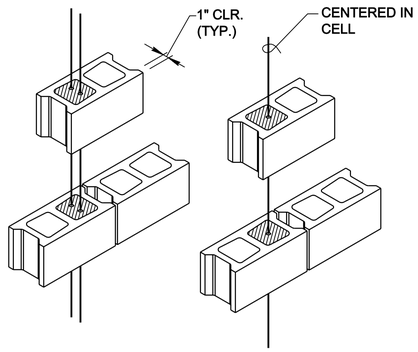

TYPICAL VERTICAL REINFORCING FOR SINGLE AND DOUBLE STIFFNERS

NO SCALE

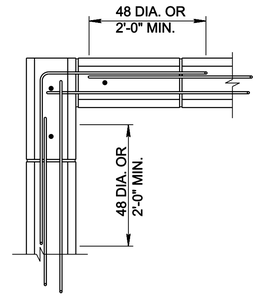

PLAN VIEW OF REINFORCEMENT

NO SCALE

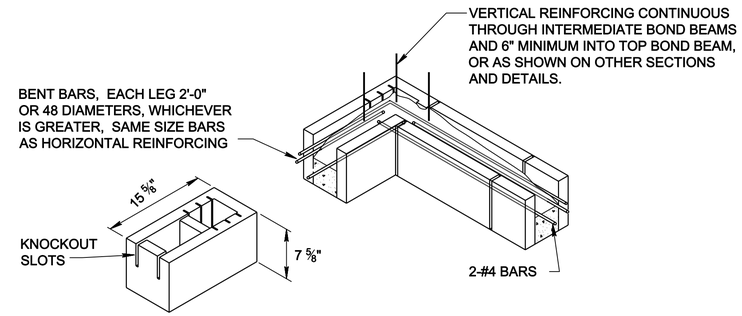

BOND BEAM UNIT AT CORNER

NO SCALE

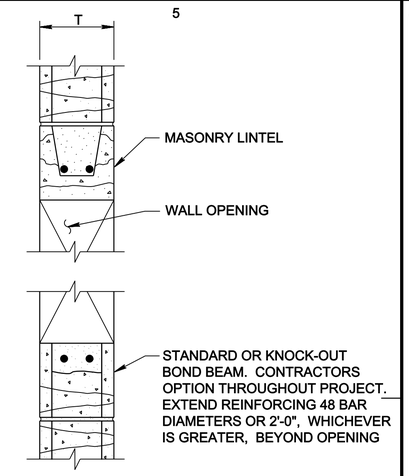

SECTION 5

S-801 | S-803

NO SCALE

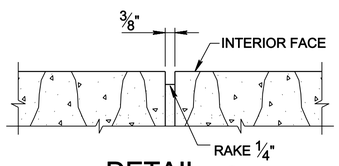

DETAIL A

NO SCALE

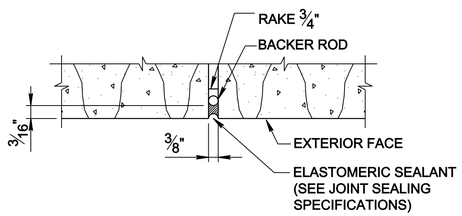

DETAIL B

NO SCALE

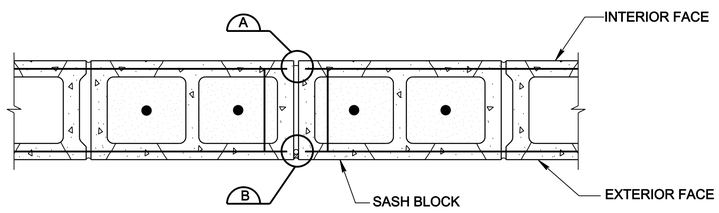

CMU CONTROL JOINT (M.C.J.) SECTION 3

NO SCALE S-801 | S-803 S-802

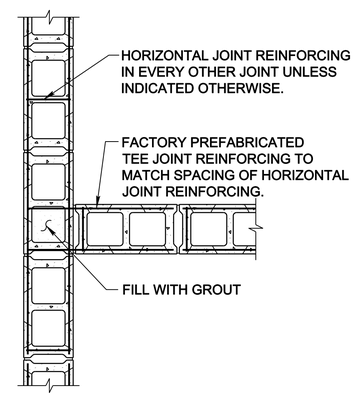

INTERSECTION OF STRUCTURAL WALLS

NO SCALE

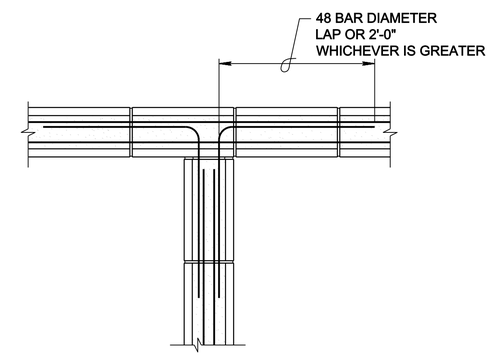

INTERSECTION OF BOND BEAM

NO SCALE

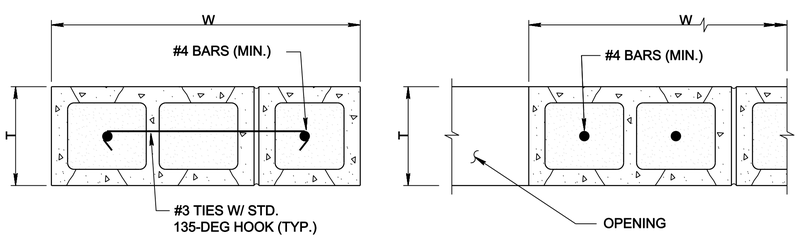

SECTION 1

NO SCALE S-801 | S-803 S-802

SECTION 2

NO SCALE S-801 | S-803

REINFORCING DETAIL FOR CMU ADJACENT TO OPENINGS		
CMU WALL THICKNESS ("t")	SEE SECTION 1 IF:	SEE SECTION 2 IF:
8"	2'-0" ≤ w ≤ 3'-4"	w > 3'-4"

NOTE:

"W" = WIDTH OF CMU BETWEEN ADJACENT OPENINGS.
"H" = HEIGHT OF ADJACENT CMU OPENING.

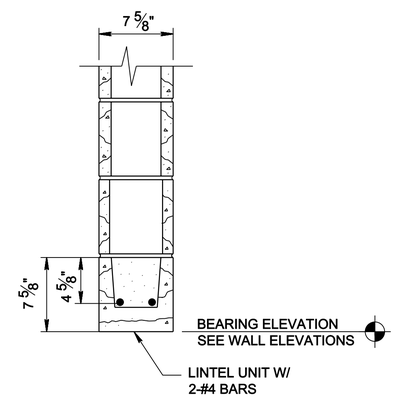

LINTEL L-1

1' 6" 0 1'

SCALE: 1-1/2" = 1'-0"

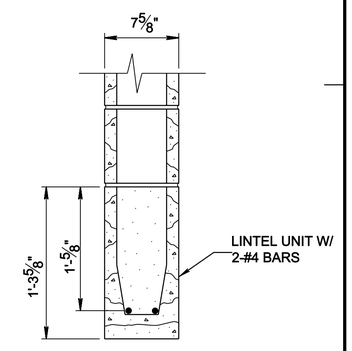

LINTEL L-2

1' 6" 0 1'

SCALE: 1-1/2" = 1'-0"

US ARMY CORPS OF ENGINEERS
OMAHA DISTRICT

MARK	DESCRIPTION	DATE	APPR.

MARK	DESCRIPTION	DATE	APPR.

U. S. ARMY ENGINEER DISTRICT
CORPS OF ENGINEERS
OMAHA DISTRICT

DESIGNED BY: N.C.D. | DATE: JULY 2010
DWN BY: N.C.D. | CKD BY: B.K.H. | SOLICITATION NO.: Y
SUBMITTED BY: B.K.H. | CONTRACT NO.: Z
FILE NAME: auto_short_design | FILE NUMBER: X
SIZE: 33.1X22 | PLOT SCALE: auto_scale | PLOT DATE: auto_sytime

DOD, STANDARDS
PRESSURIZED HYDRANT DIRECT FUELING SYSTEM

CONTROL ROOM MASONRY DETAILS

SHEET IDENTIFICATION NUMBER
S-803

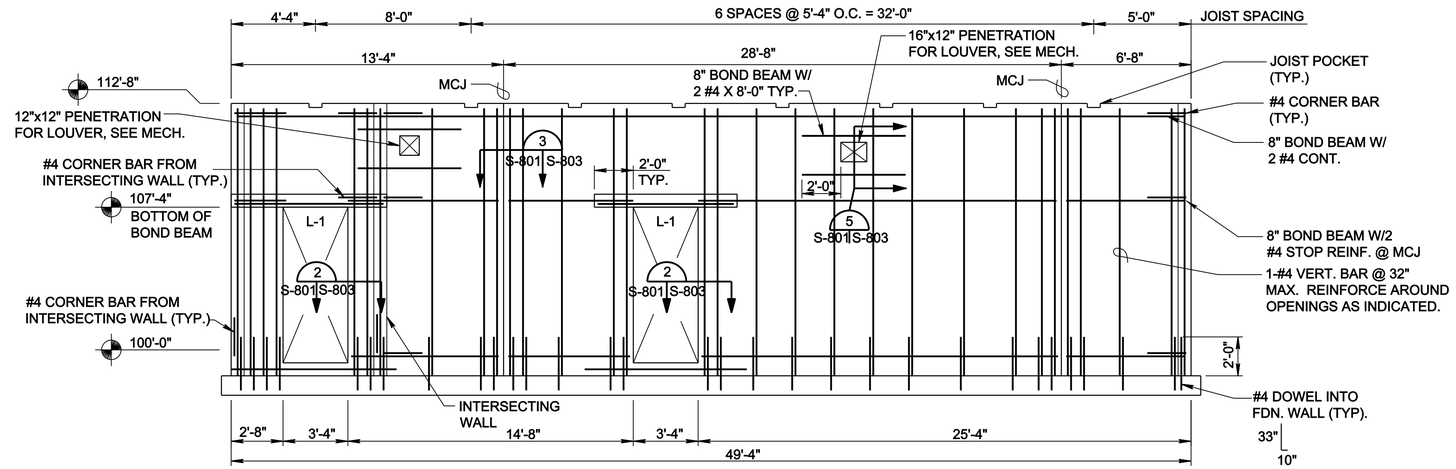

ELEVATION 1

4' 2' 0 4'

SCALE: 1/4" = 1'-0"

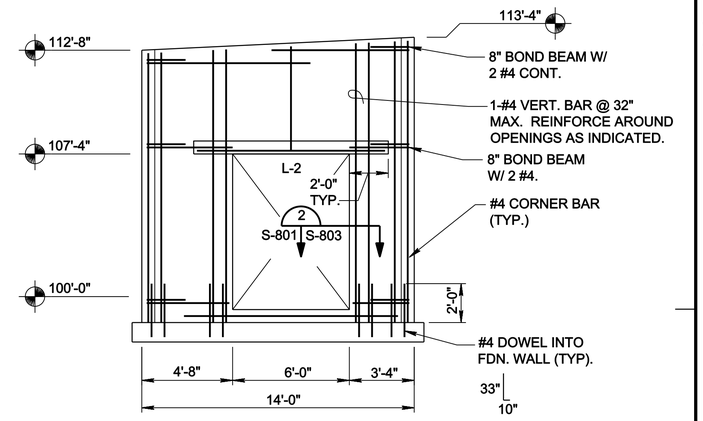

ELEVATION 2

4' 2' 0 4'

SCALE: 1/4" = 1'-0"

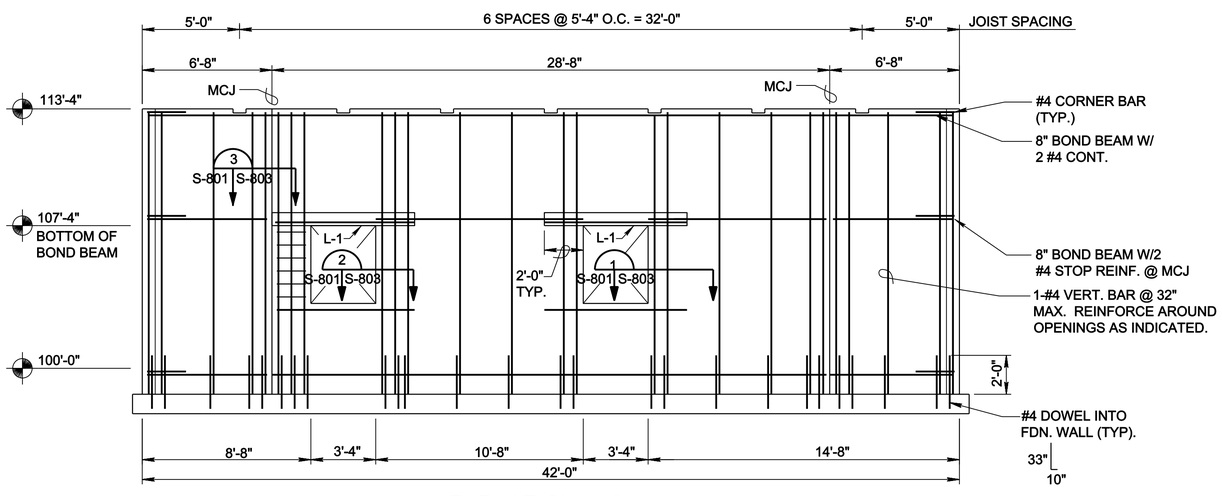

ELEVATION 3

4' 2' 0 4'

SCALE: 1/4" = 1'-0"

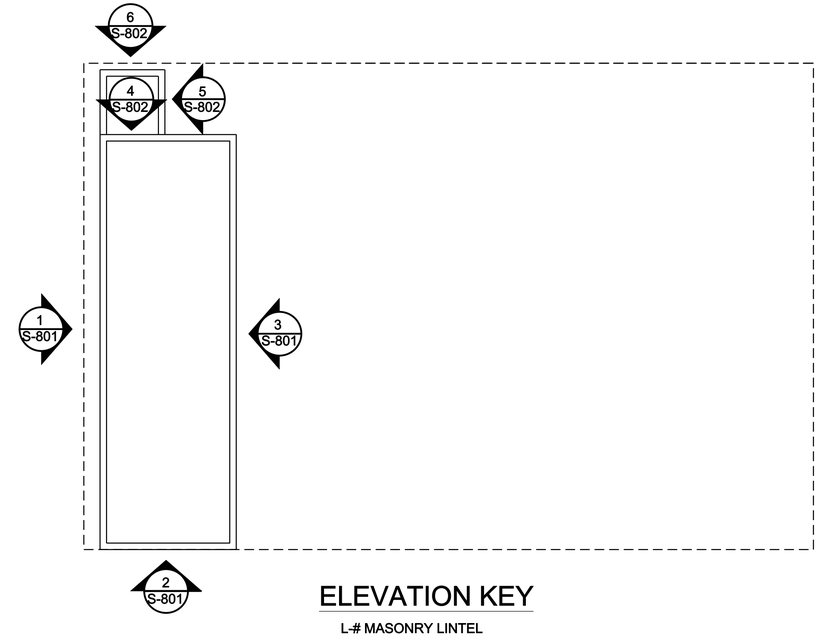

ELEVATION KEY

L-# MASONRY LINTEL
SEE DETAILS ON S-803

NOTES TO THE DESIGNER

1. REINFORCING SHOWN IS SUITABLE FOR A BASIC WIND SPEED OF 90 MPH (3-SECOND GUST) AND SEISMIC PARAMETERS: Ss <= 0.5 & S1 <= 0.2. REDESIGN AS REQUIRED TO SUIT SITE SPECIFIC CONDITIONS.
2. TOP OF FOOTING ELEVATIONS SHALL BE 98'-8" OR AS RECOMMENDED BY THE FINAL FOUNDATION REPORT.

US ARMY CORPS OF ENGINEERS
OMAHA DISTRICT

MARK	DESCRIPTION	DATE	APPR.

MARK	DESCRIPTION	DATE	APPR.

U. S. ARMY ENGINEER DISTRICT
CORPS OF ENGINEERS
OMAHA DISTRICT

DESIGNED BY: N.C.D. | DATE: JULY 2010
DWN BY: N.C.D. | CKD BY: B.K.H. | SOLICITATION NO.: Y
SUBMITTED BY: B.M.T. | CONTRACT NO.: Y
FILE NAME: OD36S-804.dwg | FILE NUMBER: X
SIZE: 33.1X22 | PLOT SCALE: 0'-0 1/16" " / mm | PLOT DATE: 7/21/2010

DOD, STANDARDS
PRESSURIZED HYDRANT DIRECT FUELING SYSTEM

PUMP SHELTER
CONTROL ROOM MASONRY ELEVATIONS
SHEET 1 OF 2

SHEET IDENTIFICATION NUMBER
S-804

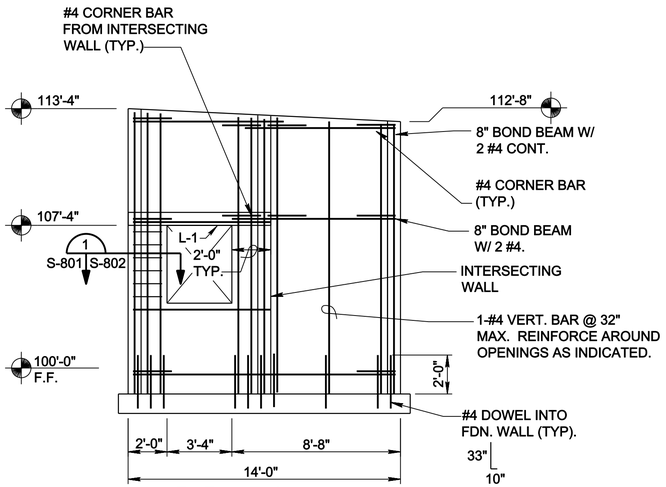

ELEVATION 4

SCALE: 1/4" = 1'-0"

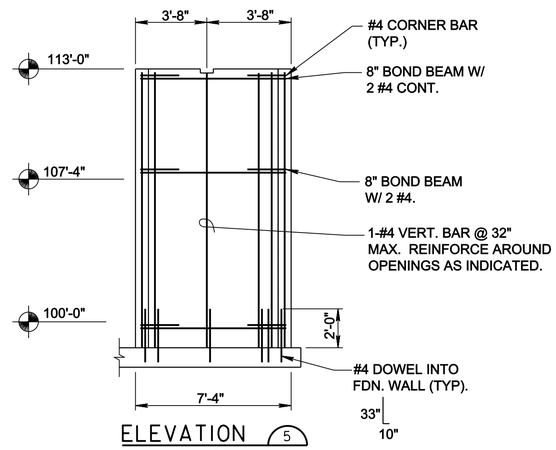

ELEVATION 5

SCALE: 1/4" = 1'-0"

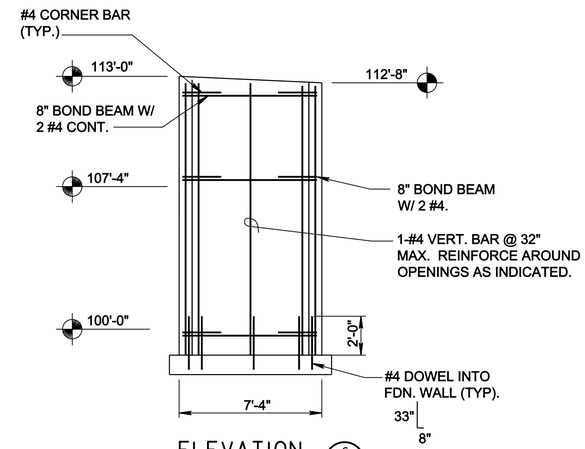

ELEVATION 6

SCALE: 1/4" = 1'-0"

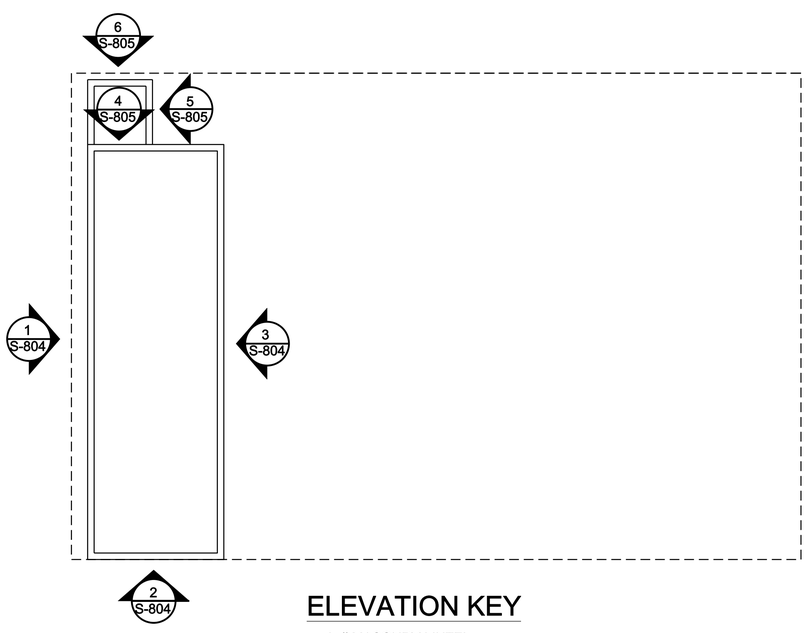

ELEVATION KEY

L-# MASONRY LINTEL
SEE DETAILS ON S-803

MASONRY NOTES:

1. REINFORCED MASONRY:
   A. DESIGN STRENGTH: f'm = 1500 PSI.
   B. CMU: ASTM C90, TYPE NORMAL WEIGHT
   C. MORTAR: ASTM C270 TYPE S,
      MINIMUM COMPRESSIVE STRENGTH f'c = 1800 PSI.
   D. REINFORCING BARS: ASTM A615
      SPECIFIED YIELD STRENGTH; Fy = 60 KSI, GRADE 60.
   E. GROUT: ASTM C476
      MINIMUM COMPRESSIVE STRENGTH, f'c = 2000 PSI AT 28 DAYS.

2. PROVIDE HORIZONTAL JOINT REINFORCEMENT (NOT SHOWN) AT 16" O.C.

3. PROVIDE VERTICAL REINFORCING CONSISTING OF #4 BARS AT 32" O.C. MAX. PROVIDE ADDITIONAL VERTICAL REINFORCING AT OPENINGS MASONRY CONTROL JOINTS AND CORNERS AS INDICATED ON WALL ELEVATIONS.

4. THE CONTRACTOR SHALL PROVIDE ADEQUATE TEMPORARY BRACING FOR ALL MASONRY WALLS DURING CONSTRUCTION.

5. USE 8 INCH DEEP LINTELS, THE THICKNESS OF THE WALLS, REINFORCED WITH 2-#4 BARS, AT OPENINGS WHERE LINTELS ARE NOT DETAILED. LINTEL REINFORCING SHALL EXTEND 48 BAR DIAMETERS (d) OR 2'-0" BEYOND OPENING, WHICHEVER IS GREATER.

6. STIRRUPS AND TIES SHALL EXTEND FROM THE CLOSEST HORIZONTAL COURSE JOINT ABOVE THE OPENING TO THE CLOSEST HORIZONTAL COURSE JOINT BELOW THE OPENING.

7. LAP SPLICES OF BARS TO BE 48 BAR DIAMETERS BUT NOT LESS THAN 24 INCHES.

MASONRY LAP BAR SCHEDULE

FOR 2000 PSI GROUT

LAP SPLICE LENGTH	
#4	24"
#5	30"
#6	36"

NOTES TO THE DESIGNER
1. REINFORCING SHOWN IS SUITABLE FOR A BASIC WIND SPEED OF 90 MPH (3-SECOND GUST) AND SEISMIC PARAMETERS: Ss <= 0.5 & S1 <= 0.2. REDESIGN AS REQUIRED TO SUIT SITE SPECIFIC CONDITIONS.
2. TOP OF FOOTING ELEVATIONS SHALL BE 98'-8" OR AS RECOMMENDED BY THE FINAL FOUNDATION REPORT.

US ARMY CORPS OF ENGINEERS
OMAHA DISTRICT

MARK	DESCRIPTION	DATE	APPR.

MARK	DESCRIPTION	DATE	APPR.

U. S. ARMY ENGINEER DISTRICT
CORPS OF ENGINEERS
OMAHA DISTRICT

DESIGNED BY: N.C.D. | DATE: JULY 2010
DWN BY: N.C.D. | CKD BY: B.K.K. | SOLICITATION NO.: Y
SUBMITTED BY: B.K.K. | CONTRACT NO.: Y
FILE NAME: auto_short_design | FILE NUMBER: X
SIZE: 33.1X22 | PLOT SCALE: auto_scale | PLOT DATE: auto_sytime

DOD, STANDARDS
PRESSURIZED HYDRANT DIRECT FUELING SYSTEM

PUMP SHELTER
CONTROL ROOM MASONRY ELEVATIONS
SHEET 2 OF 2

SHEET IDENTIFICATION NUMBER
S-805

auto_design
auto_usersname