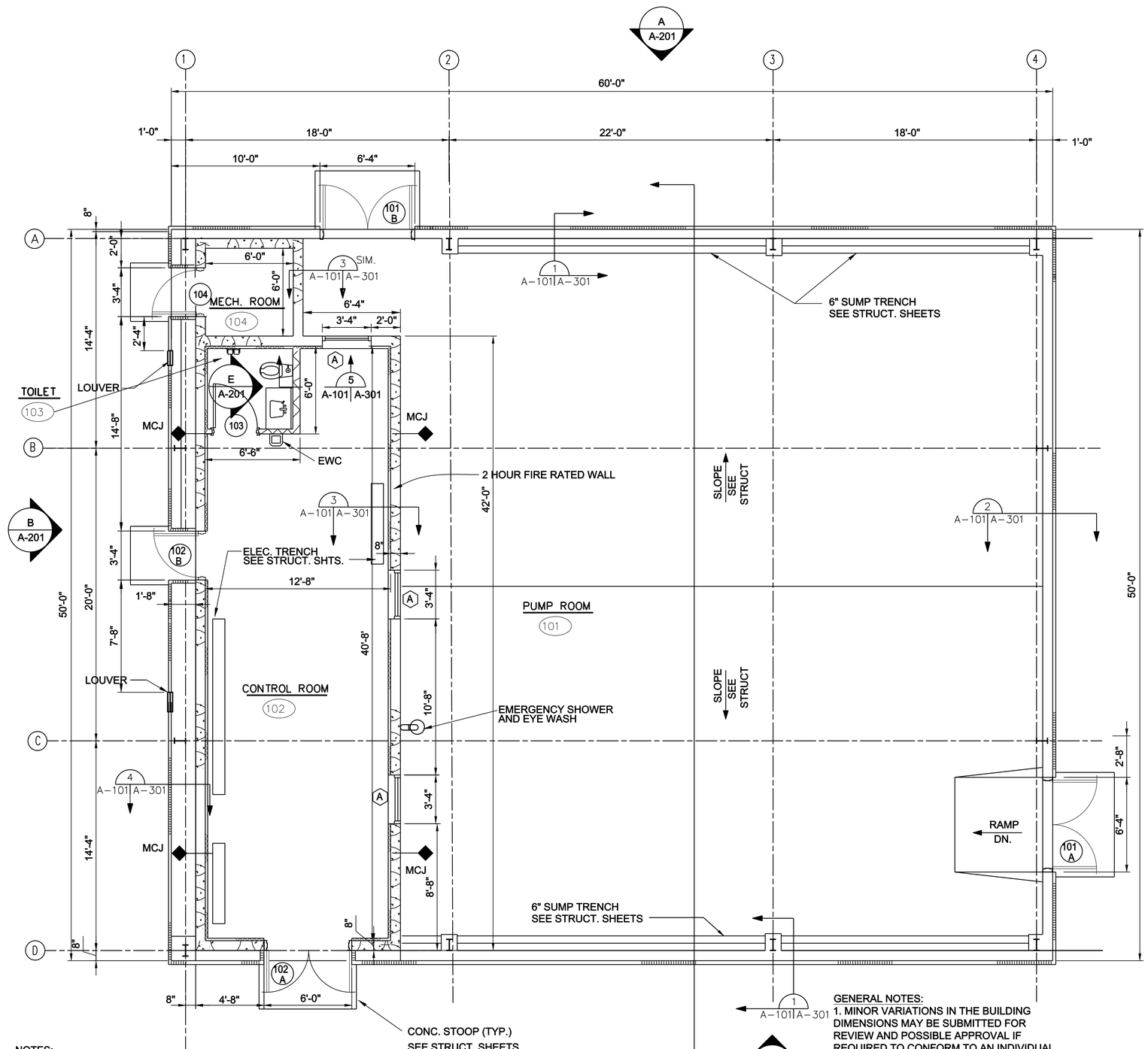

NOTES:

1. ALL EXTERIOR DOORS SHALL BE SUPPLIED WITH PANIC TYPE HARDWARE.

MCJ = MASONRY CONTROL JOINTS

FLOOR PLAN

SCALE: $\frac{1}{4}$ INCH = 1 FOOT

GENERAL NOTES:

1. MINOR VARIATIONS IN THE BUILDING DIMENSIONS MAY BE SUBMITTED FOR REVIEW AND POSSIBLE APPROVAL IF REQUIRED TO CONFORM TO AN INDIVIDUAL BUILDING SUPPLIER'S STANDARD.
2. ALL CMU WALL SHALL BE 8" UNITS.
3. CONFORM TO THE INSTALLATION DESIGN GUIDE AND ARCHITECTURAL COMPTIBILITY STANDARDS FOR ALL APPLICABLE REQUIREMENTS.

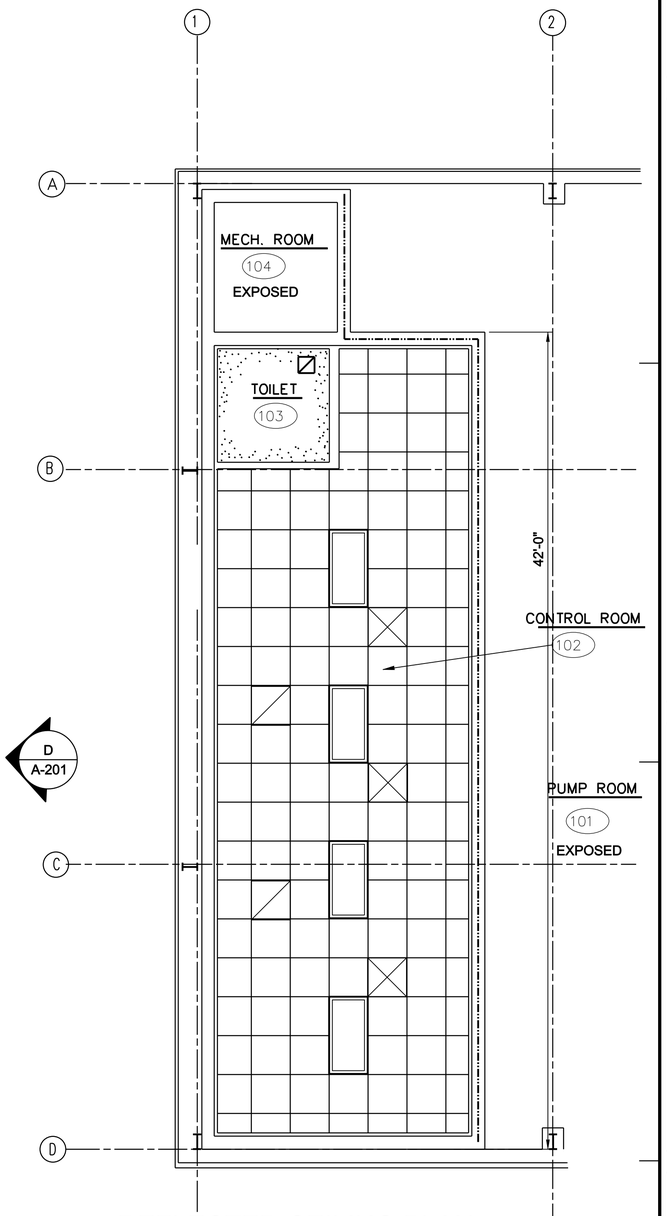

REFLECTED CEILING PLAN

SCALE: $\frac{1}{4}$ INCH = 1 FOOT

LEGEND:

- GYPSUM CEILING
- 2 X 2 ACOUSTICAL CEILING TILE
- 2 X 4 LIGHT FIXTURE (SEE ELECTRICAL)
- 2 HOUR FIRE WALL
- LIGHT FIXTURE (SEE ELECTRICAL)
- RECESSED LIGHT FIXTURE (SEE ELECTRICAL)
- RETURN AIR GRILL OR EXHAUST GRILL (SEE MECHANICAL)
- SUPPLY AIR DIFFUSER (SEE MECHANICAL)

US ARMY CORPS OF ENGINEERS
OMAHA DISTRICT

MARK	DESCRIPTION	DATE	APPR.

MARK	DESCRIPTION	DATE	APPR.

U. S. ARMY ENGINEER DISTRICT
CORPS OF ENGINEERS
OMAHA DISTRICT

DESIGNED BY: M.D.MORRISON | DATE: JULY 2010
DWN BY: M.D.M. | CKD BY: C.F. B. | SOLICITATION NO.: Y
SUBMITTED BY: C.F. B. | CONTRACT NO.: X
FILE NAME: 0D39A-101.dwg | FILE NUMBER:
SIZE: 33.1X22 | PLOT SCALE: 3'-3 3/8" = 1" / in. | PLOT DATE: 6/29/2010

DOD, STANDARDS
PRESSURIZED HYDRANT DIRECT FUELING SYSTEM

PUMPHOUSE
FLOOR PLAN AND
REFLECTED CEILING PLAN

SHEET IDENTIFICATION NUMBER
A-101

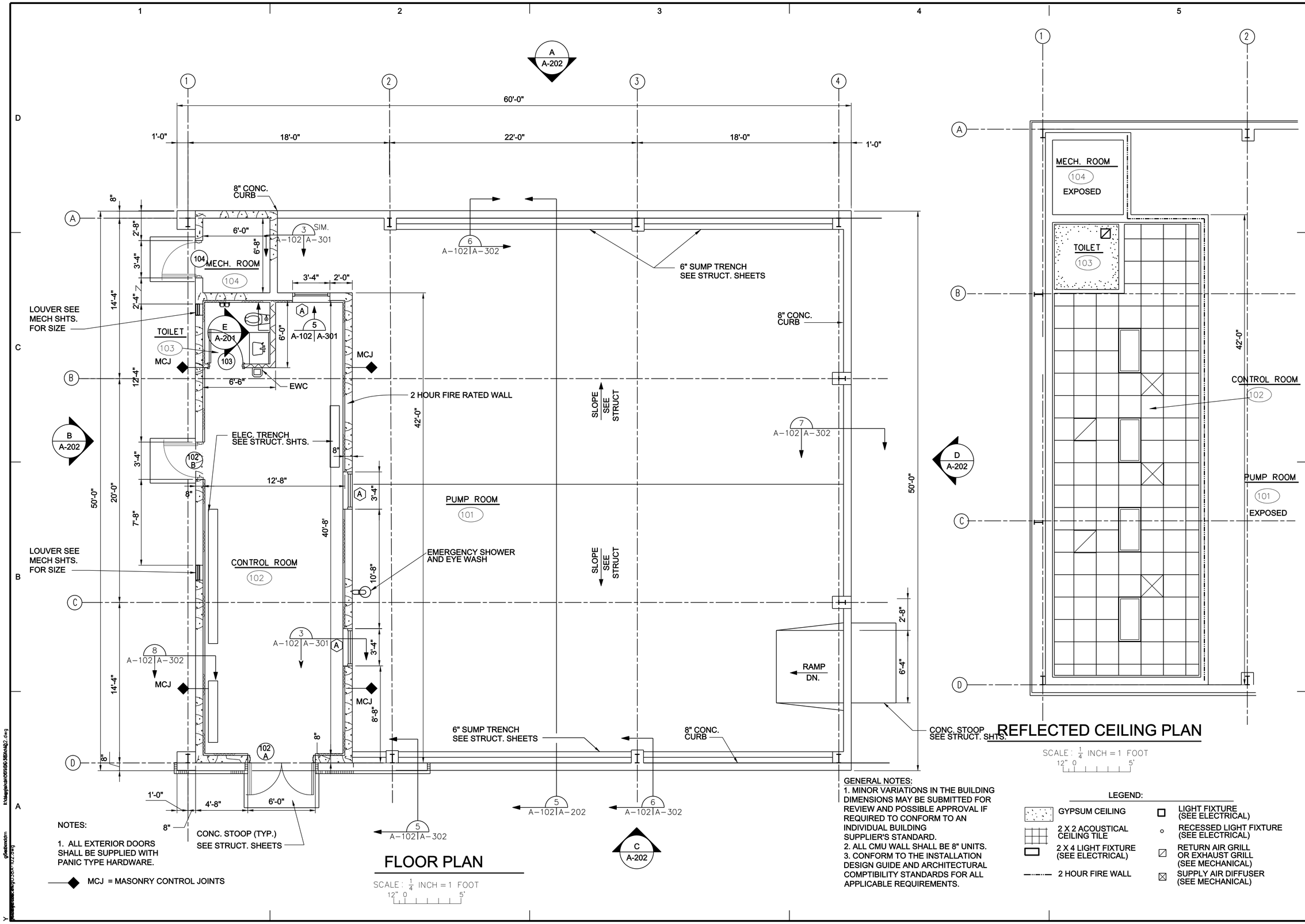

NOTES:

1. ALL EXTERIOR DOORS SHALL BE SUPPLIED WITH PANIC TYPE HARDWARE.

MCJ = MASONRY CONTROL JOINTS

FLOOR PLAN

SCALE: 1/4 INCH = 1 FOOT

REFLECTED CEILING PLAN

SCALE: 1/4 INCH = 1 FOOT

GENERAL NOTES:

1. MINOR VARIATIONS IN THE BUILDING DIMENSIONS MAY BE SUBMITTED FOR REVIEW AND POSSIBLE APPROVAL IF REQUIRED TO CONFORM TO AN INDIVIDUAL BUILDING SUPPLIER'S STANDARD.
2. ALL CMU WALL SHALL BE 8" UNITS.
3. CONFORM TO THE INSTALLATION DESIGN GUIDE AND ARCHITECTURAL COMPTIBILITY STANDARDS FOR ALL APPLICABLE REQUIREMENTS.

LEGEND:

- GYPSUM CEILING
- 2 X 2 ACOUSTICAL CEILING TILE
- 2 X 4 LIGHT FIXTURE (SEE ELECTRICAL)
- 2 HOUR FIRE WALL
- LIGHT FIXTURE (SEE ELECTRICAL)
- RECESSED LIGHT FIXTURE (SEE ELECTRICAL)
- RETURN AIR GRILL OR EXHAUST GRILL (SEE MECHANICAL)
- SUPPLY AIR DIFFUSER (SEE MECHANICAL)

US ARMY CORPS OF ENGINEERS
OMAHA DISTRICT

MARK	DESCRIPTION	DATE	APPR.

MARK	DESCRIPTION	DATE	APPR.

U. S. ARMY ENGINEER DISTRICT
CORPS OF ENGINEERS
OMAHA DISTRICT

DESIGNED BY: M.D.MORRISON
DWN BY: M.D.M.
CKD BY: C.F.B.
SUBMITTED BY: C.F.B.
FILE NAME: 0D38A-102.dwg
SIZE: 33.1X22
PLOT SCALE: 0"-1" ':" / in.
DATE: JULY 2010
SOLICITATION NO.: Y
CONTRACT NO.: Y
FILE NUMBER: X
PLOT DATE: 6/29/2010

DOD, STANDARDS
PRESSURIZED HYDRANT DIRECT FUELING SYSTEM

PUMP SHELTER
FLOOR PLAN AND
REFLECTED CEILING PLAN

SHEET IDENTIFICATION NUMBER
A-102

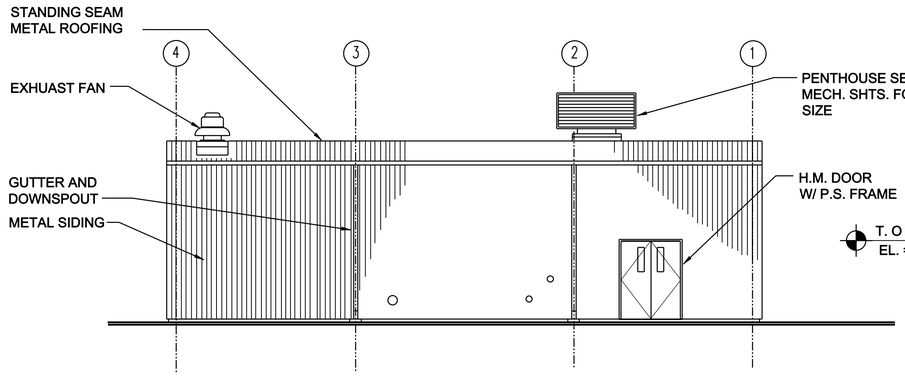

BACK ELEVATION (A / A-101|A-201)
SCALE 1/8"-1'-0"

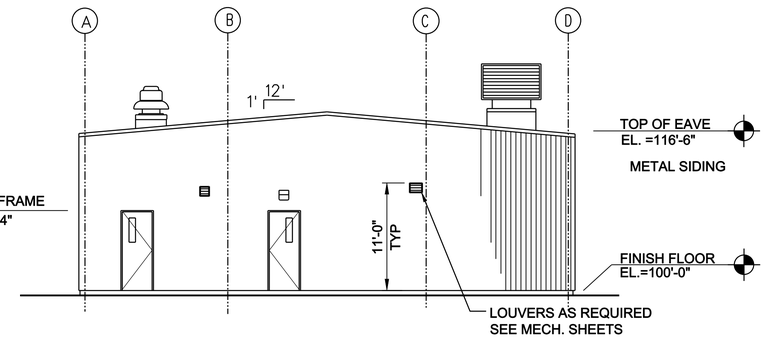

LEFT SIDE ELEVATION (B / A-101|A-201)
SCALE 1/8"=1'-0"

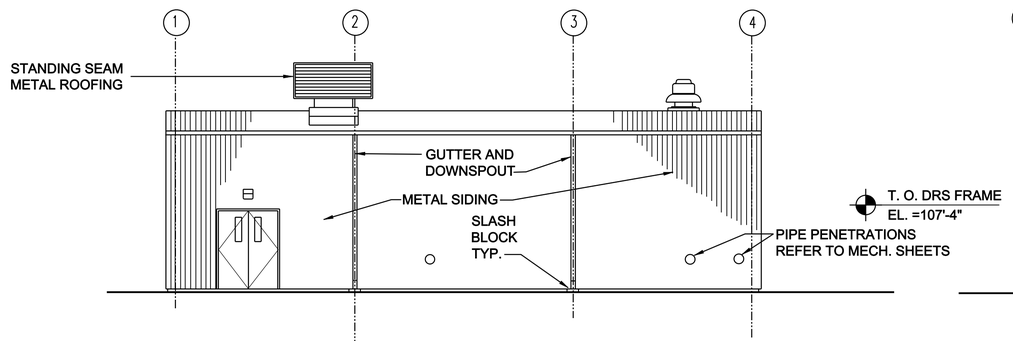

FRONT ELEVATION (C / A-101|A-201)
SCALE 1/8"-1'-0"

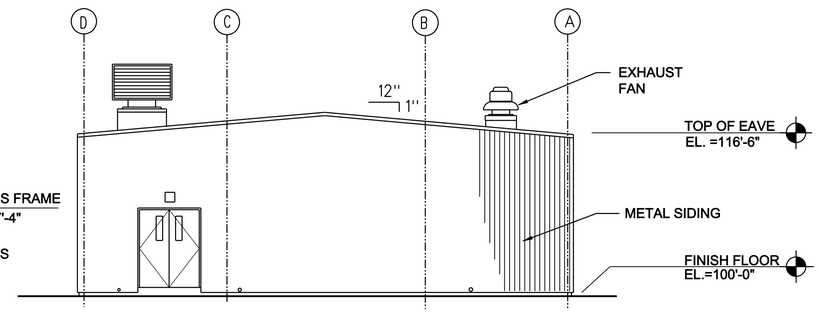

RIGHT SIDE ELEVATION (D / A-101|A-201)
SCALE 1/8"=1'-0"

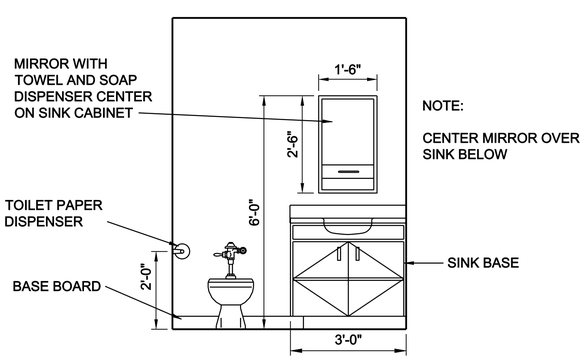

ELEVATION (E / A-101 | A-201 / A-102)
SCALE 1/8"=1'-0"

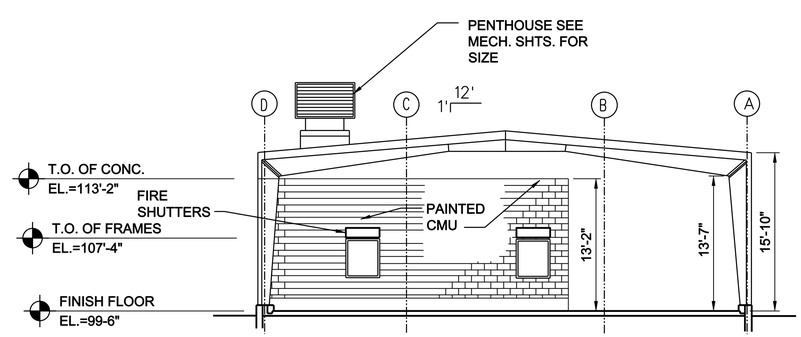

SECTION THRU PUMP HOUSE (5 / A-101|A-201)
SCALE 1/8"=1'-0"

GENERAL NOTES:

1. REFER TO MECHANICAL SHEET FOR PIPE PENETRATION THROUGH EXTERIOR WALL LOCATIONS.

2. ROOF SLOPES SHOWN ARE A MINIMUM AND SHALL BE COORDINATED WITH THE INSTALLATION STANDARDS AND GEOGRAPHIC CONDITIONS AS REQUIRED TO ACCOMMODATE SNOW AND OTHER LOADING CONDITIONS.

US ARMY CORPS
OF ENGINEERS
OMAHA DISTRICT

MARK	DESCRIPTION	DATE	APPR.

MARK	DESCRIPTION	DATE	APPR.

U. S. ARMY ENGINEER DISTRICT
CORPS OF ENGINEERS
OMAHA DISTRICT

DESIGNED BY: M.D.MORRISON
DATE: JULY 2010
SOLICITATION NO.: Y
DWN BY: MDM
CKD BY: CFB
CONTRACT NO.: X
SUBMITTED BY: CFB
FILE NUMBER: X
FILE NAME: C0358-X-201.dwg
PLOT SCALE: 0'-1" :1" / in.
PLOT DATE: 6/29/2010
SIZE: 33.1X22

DOD, STANDARDS
PRESSURIZED HYDRANT DIRECT FUELING SYSTEM

PUMPHOUSE
BUILDING ELEVATIONS
AND BUILDING SECTION

SHEET
IDENTIFICATION
NUMBER
A-201

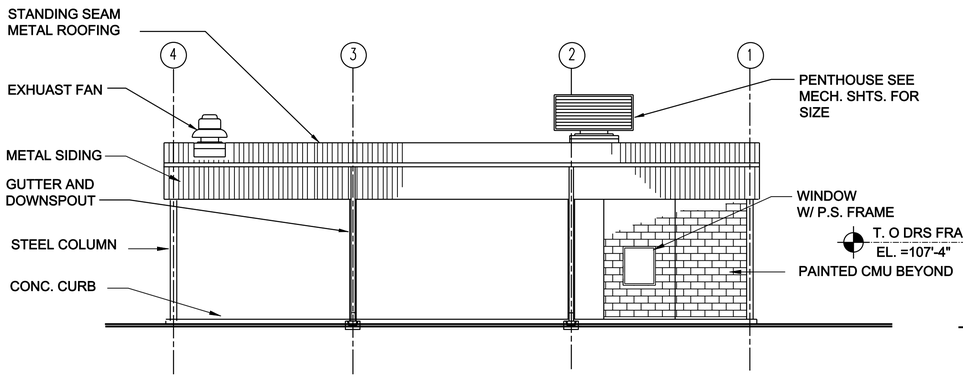

ELEVATION A A-102 | A-202
SCALE 1/8"=1'-0"

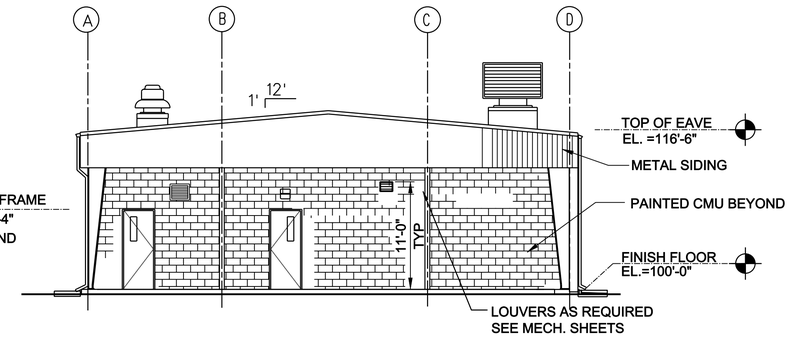

ELEVATION B A-102 | A-202
SCALE 1/8"=1'-0"

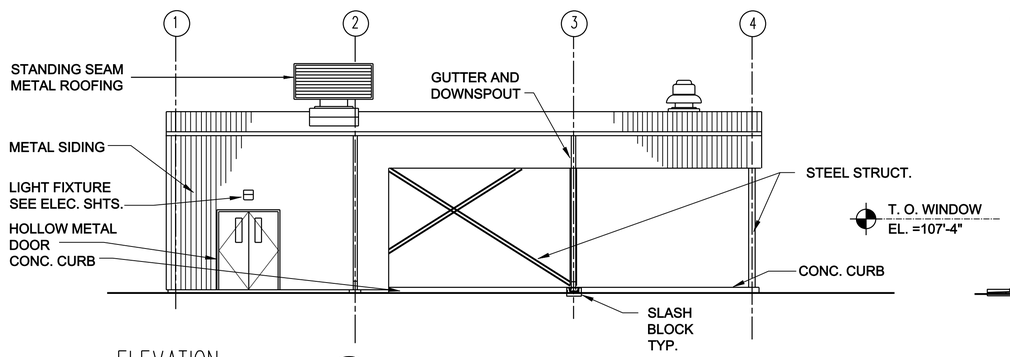

ELEVATION C A-102 | A-202
SCALE 1/8"=1'-0"

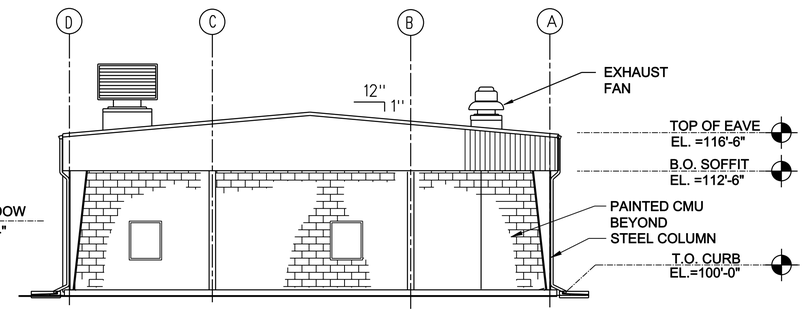

ELEVATION D A-102 | A-202
SCALE 1/8"=1'-0"

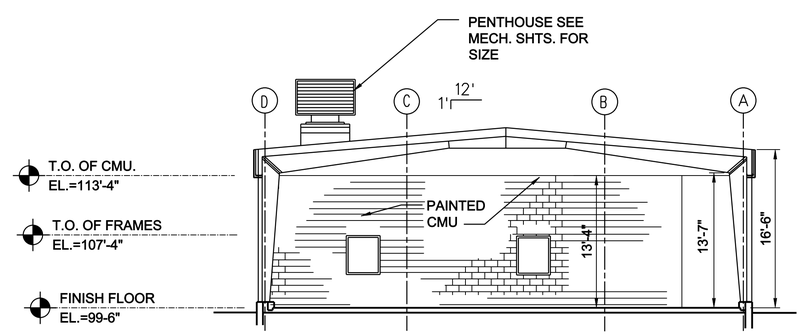

SECTION THRU PUMP HOUSE 5 A-102 | A-202
SCALE 1/8"=1'-0"

GENERAL NOTES:
1. REFER TO MECHANICAL SHEET FOR PIPE PENETRATION THROUGH EXTERIOR WALL LOCATIONS.

2. ROOF SLOPES SHOWN ARE A MINIMUM AND SHALL BE COORDINATED WITH THE INSTALLATION STANDARDS AND GEOGRAPHIC CONDITIONS AS REQUIRED TO ACCOMMODATE SNOW AND OTHER LOADING CONDITIONS.

US ARMY CORPS OF ENGINEERS
OMAHA DISTRICT

MARK	DESCRIPTION	DATE	APPR.

MARK	DESCRIPTION	DATE	APPR.

U. S. ARMY ENGINEER DISTRICT
CORPS OF ENGINEERS
OMAHA DISTRICT

DESIGNED BY: M.D.MORRISON
DWN BY: M.D.MORRISON
CKD BY: C.F.B.
SUBMITTED BY: CFB
FILE NAME: 00358A-202.dwg
SIZE: 33.1X22
PLOT SCALE: 0"=1" / in.
DATE: JULY 2010
SOLICITATION NO.: Y
CONTRACT NO.: Y
FILE NUMBER: X
PLOT DATE: 6/29/2010

DOD, STANDARDS
PRESSURIZED HYDRANT DIRECT FUELING SYSTEM

PUMP SHELTER
BUILDING ELEVATIONS
AND BUILDING SECTION

SHEET IDENTIFICATION NUMBER
A-202

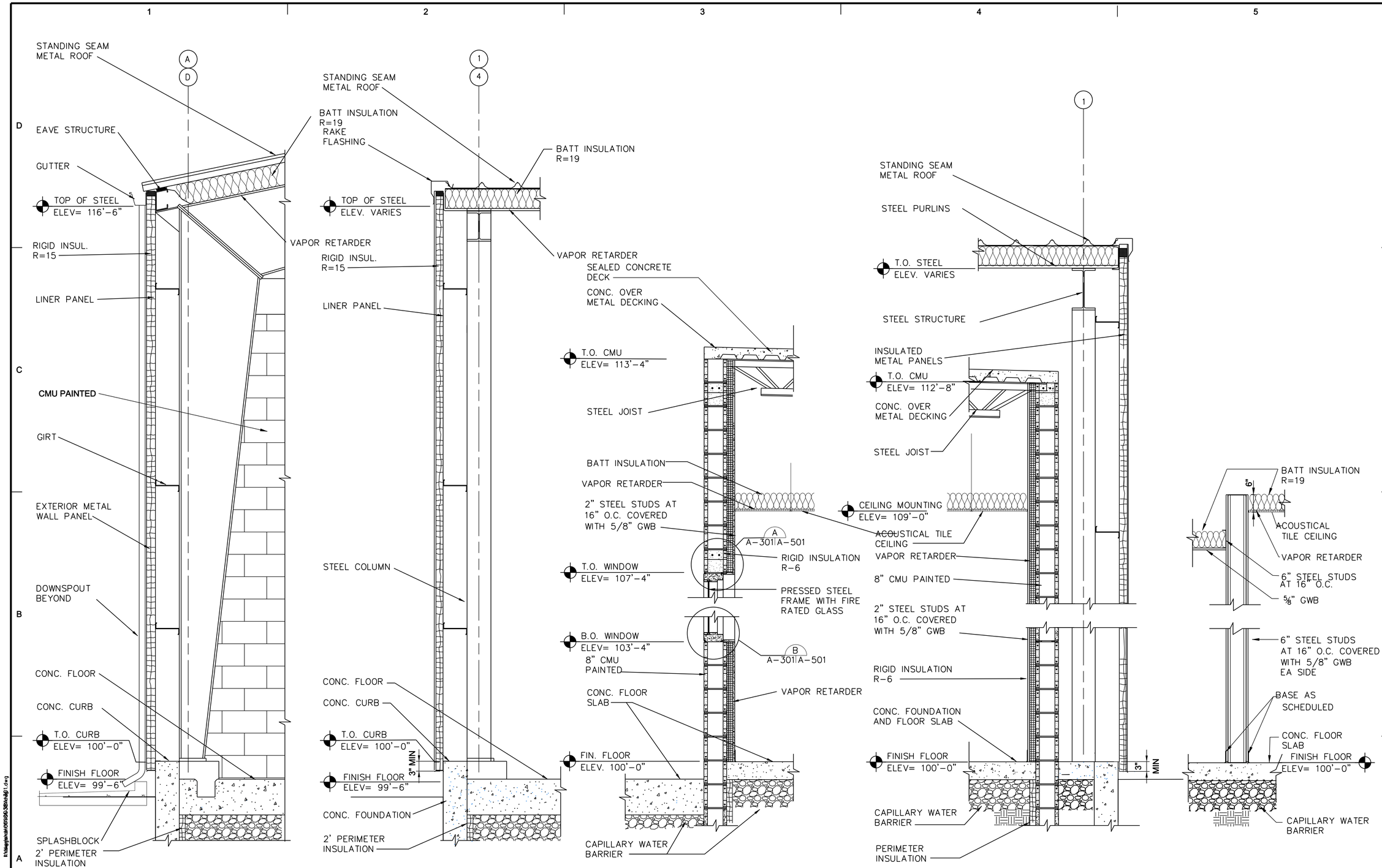

US ARMY CORPS OF ENGINEERS
OMAHA DISTRICT

MARK	DESCRIPTION	DATE	APPR.

MARK	DESCRIPTION	DATE	APPR.

U. S. ARMY ENGINEER DISTRICT
CORPS OF ENGINEERS
OMAHA DISTRICT

DESIGNED BY: M.D.MORRISON | DATE: JULY 2010
DWN BY: MDM | CKD BY: CPB | SOLICITATION NO.: Y
SUBMITTED BY: CPB | CONTRACT NO.: Y
FILE NAME: OD358A-301.dwg | FILE NUMBER: X
SIZE: 33.1X22 | PLOT SCALE: 0'-1" : 1" / in. | PLOT DATE: 6/29/2010

DOD, STANDARDS
PRESSURIZED HYDRANT DIRECT FUELING SYSTEM

PUMPHOUSE
WALL SECTION

SHEET IDENTIFICATION NUMBER
A-301

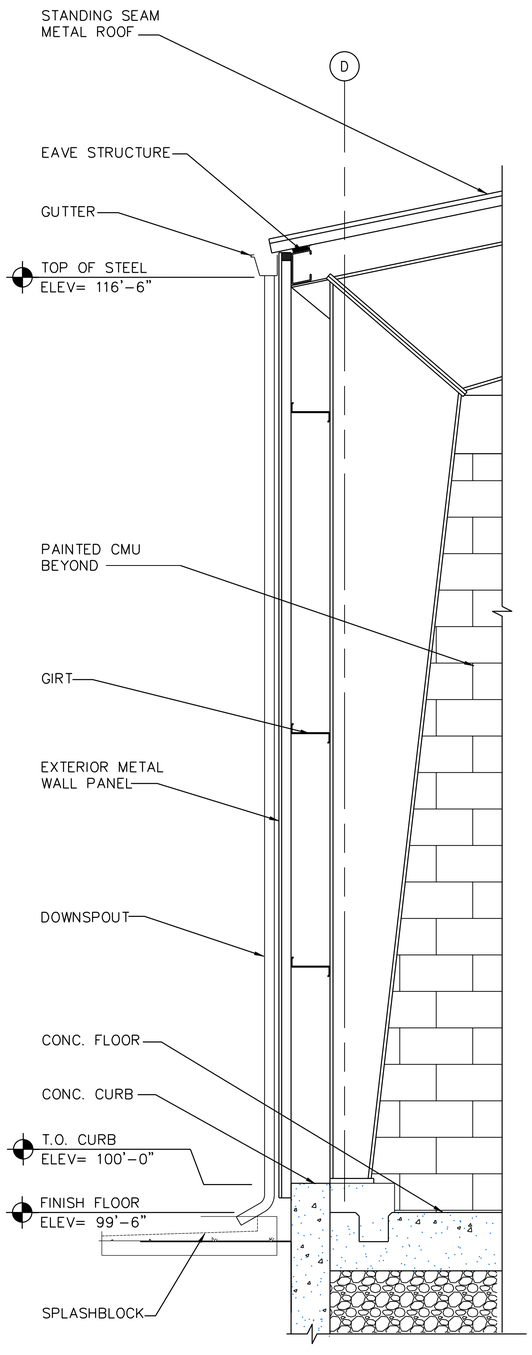

WALL SECTION 5 A-102 | A-302

SCALE: 3/4 INCH = 1 FOOT

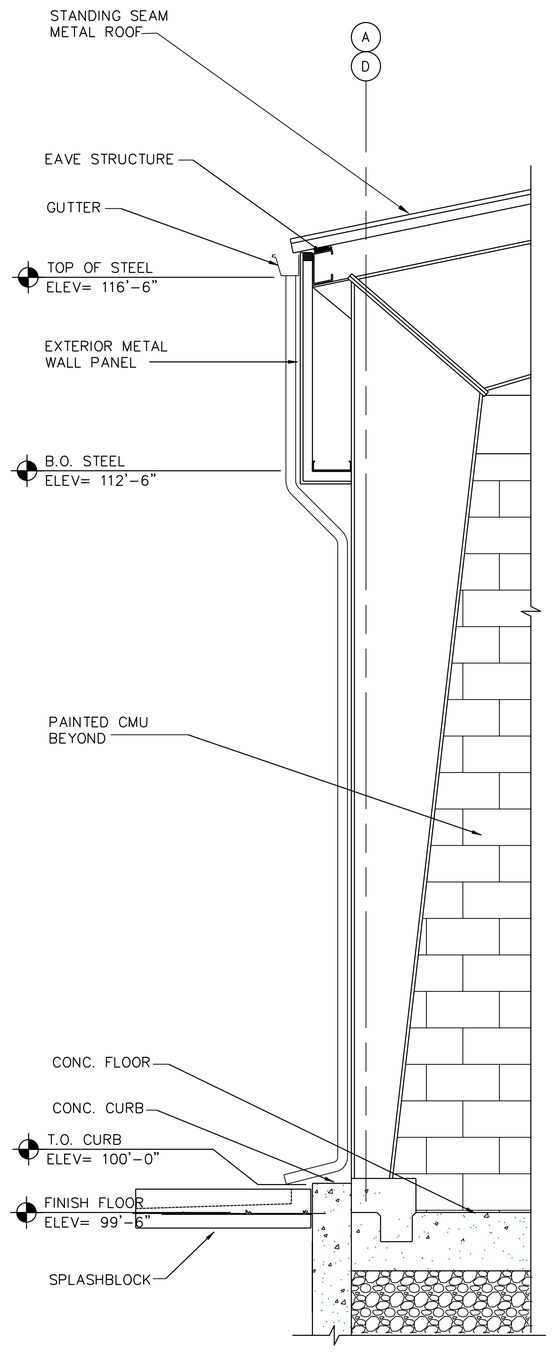

WALL SECTION 6 A-102 | A-302

SCALE: 3/4 INCH = 1 FOOT

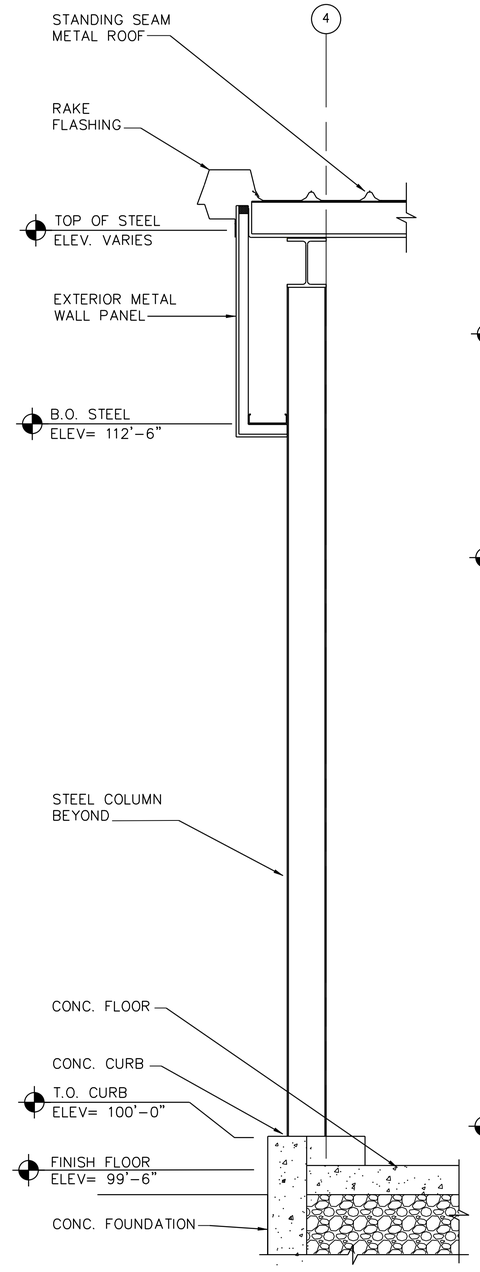

WALL SECTION 7 A-102 | A-302

SCALE: 3/4 INCH = 1 FOOT

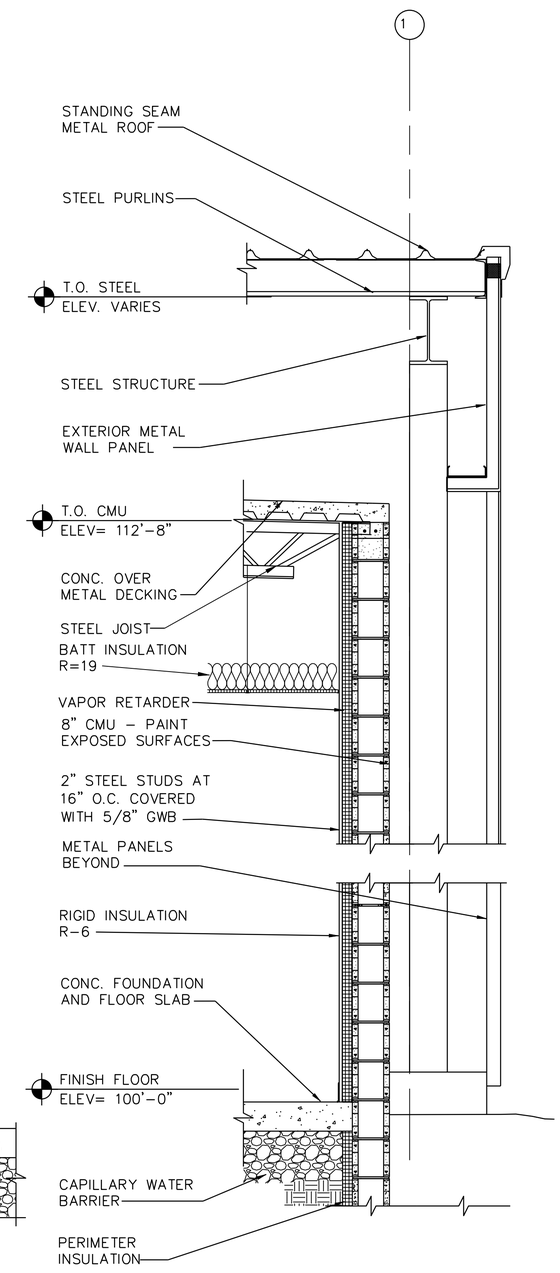

WALL SECTION 8 A-102 | A-302

SCALE: 3/4 INCH = 1 FOOT

US ARMY CORPS OF ENGINEERS
OMAHA DISTRICT

MARK	DESCRIPTION	DATE	APPR.

MARK	DESCRIPTION	DATE	APPR.

U. S. ARMY ENGINEER DISTRICT
CORPS OF ENGINEERS
OMAHA DISTRICT

DESIGNED BY: M.D.MORRISON
DWN BY: M.D.MORRISON
CKD BY: C.F.B.
SUBMITTED BY: GFB
FILE NAME: 0038A-302.dwg
SIZE: 33.1X22
PLOT SCALE: 1 / in.
DATE: JULY 2010
SOLICITATION NO.: Y
CONTRACT NO.: Y
FILE NUMBER: X
PLOT DATE: 6/29/2010

DOD, STANDARDS
PRESSURIZED HYDRANT DIRECT FUELING SYSTEM

PUMP SHELTER
WALL SECTIONS

SHEET IDENTIFICATION NUMBER
A-302

DOOR SCHEDULE

	DOOR DATA			FRAME DATA						
DOOR NO.	SIZE	MAT'L	TYPE	MAT'L	TYPE	HEAD	JAMB	SILL	FIRE RATING	REMARKS
101A	PR.3'-0"X7'-0"	HM.	N	PS	F1	C	C	G		PROVDE PANIC HARDWARE
101B	PR.3'-0"X7'-0"	HM.	N	PS	F1	C	C	G		PROVDE PANIC HARDWARE
102A	PR.2'-10"X7'-0"	HM.	N	PS	F1	D	E	F		PROVDE PANIC HARDWARE
102B	3'-0"X7'-0"	HM.	N	PS	F1	D	E	F		PROVDE PANIC HARDWARE
103	3'-0"X7'-0"	HM.	F	PS	F1	H	L	-		
104	3'-0"X7'-0"	HM.	N	PS	F1	D	E	F		

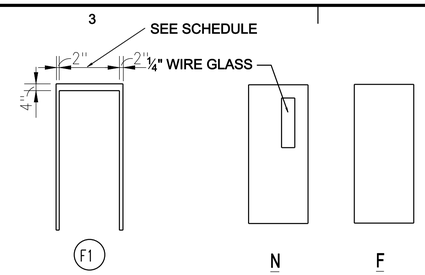

FRAMES TYPES

DOOR TYPES

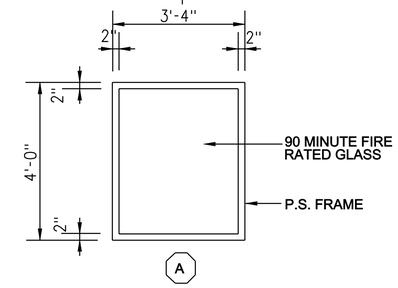

WINDOW ELEVATION

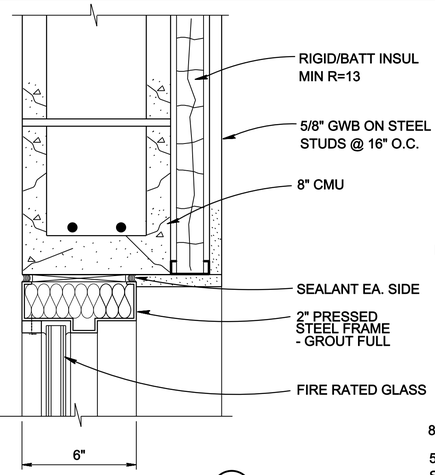

HEAD (A) — SCALE : 3"=1'-0" — A-301 | A-501

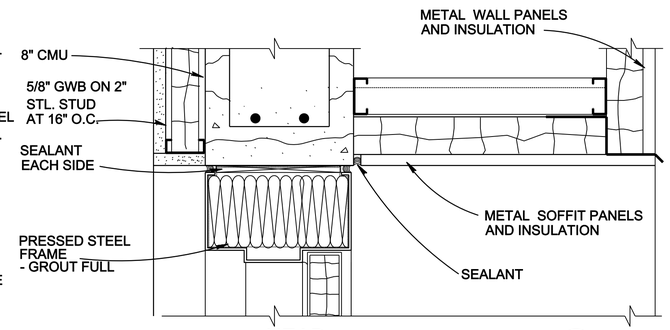

HEAD (D) — SCALE : 3"=1'-0"

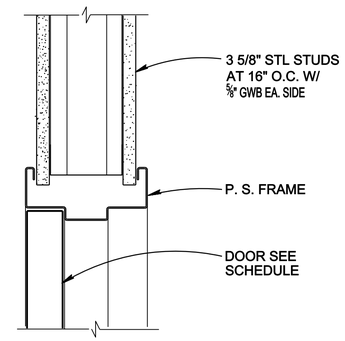

HEAD (H) — SCALE : 3"=1'-0"

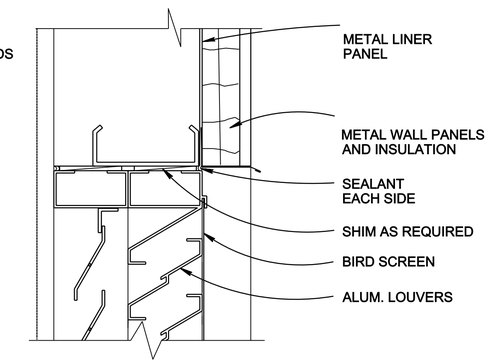

HEAD (LOUVER) - TYP. (J) — SCALE : 3"=1'-0" — A-501

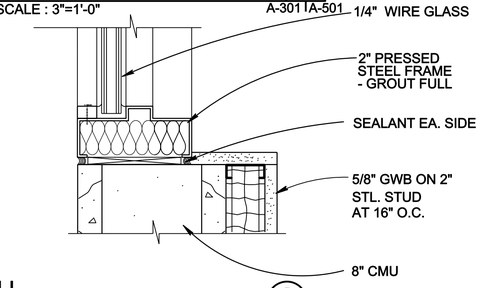

SILL (B) — SCALE : 3"=1'-0" — A-301 | A-501

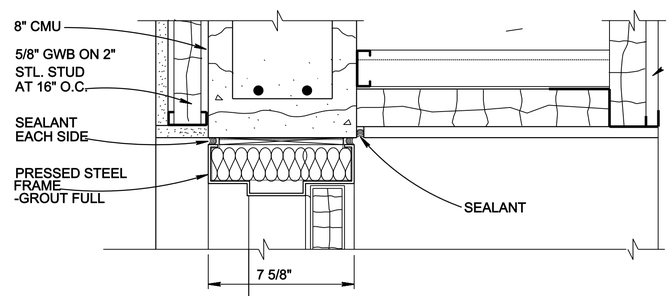

JAMB (E) — SCALE : 3"=1'-0"

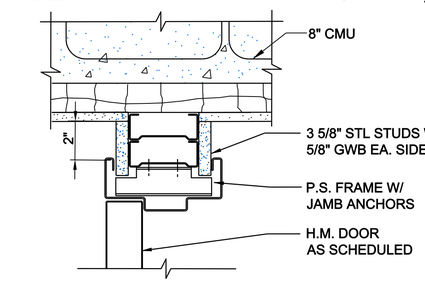

JAMB (L) — SCALE : 3"=1'-0"

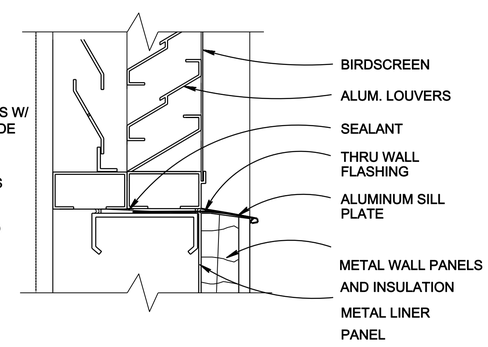

SILL (LOUVER) - TYP. (K) — SCALE : 3"=1'-0" — A-501

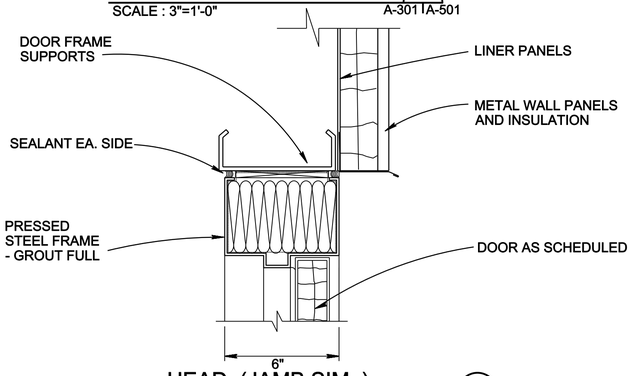

HEAD (JAMB SIM.) (C) — SCALE : 3"=1'-0"

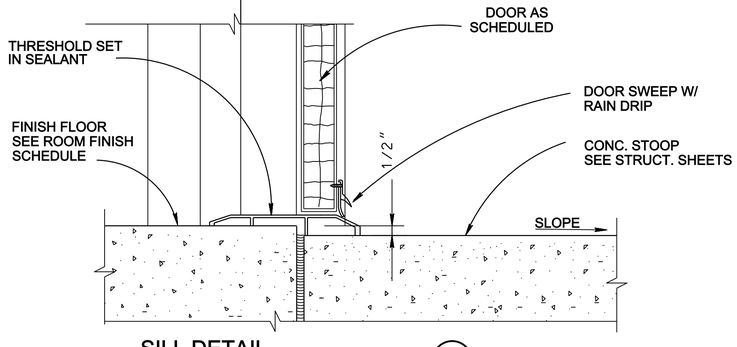

SILL DETAIL (F) — SCALE : 3"=1'-0"

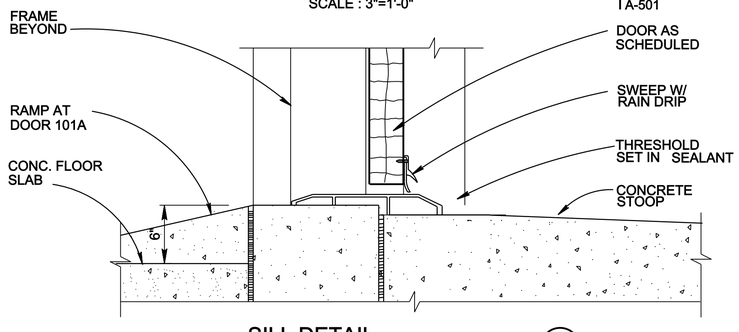

SILL DETAIL (G) — SCALE : 3"=1'-0"

US ARMY CORPS OF ENGINEERS
OMAHA DISTRICT

MARK	DESCRIPTION	DATE	APPR.

MARK	DESCRIPTION	DATE	APPR.

U. S. ARMY ENGINEER DISTRICT
CORPS OF ENGINEERS
OMAHA DISTRICT

DESIGNED BY: M.D.MORRISON | DATE: JULY 2010 | SOLICITATION NO.: Y
DWN BY: M.D.M. | CKD BY: C.F.B. | CONTRACT NO.: Y
SUBMITTED BY: | SIZE: | FILE NUMBER: X
FILE NAME: C0358-501.dwg | PLOT SCALE: 0'-1" = 1" in. | PLOT DATE: 6/29/2010
SIZE: 33.17X22

DOD, STANDARDS
PRESSURIZED HYDRANT DIRECT FUELING SYSTEM

DOOR SCHEDULE
DOOR & WINDOW DETAILS

SHEET IDENTIFICATION NUMBER
A-501