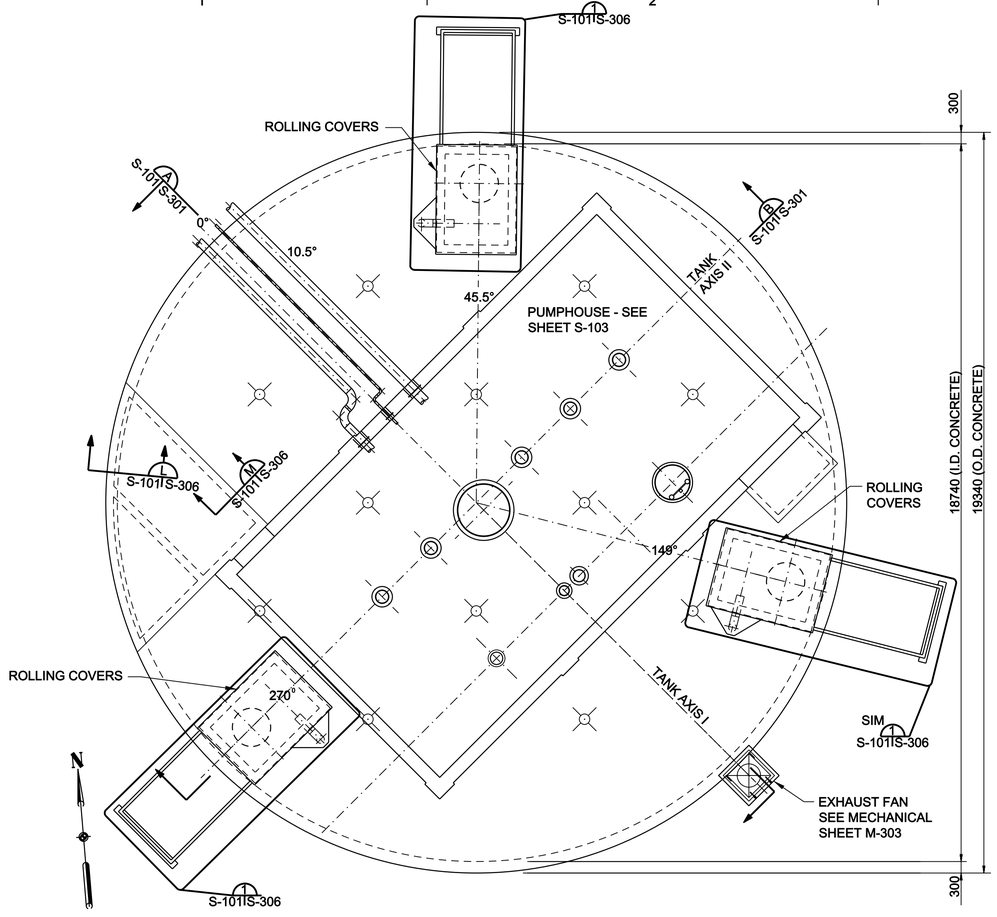

TANK 1 ROOF PLAN

0 1000 2000 4000

SCALE: 1:80

TANK SCHEDULE			
CAPACITY (BBL)	INSIDE DIAMETER (MM)	SHELL HEIGHT (MM)	REMARKS
10,000	18700	7225	NO RAMP
25,000	27500	7225	NO RAMP
50,000	38175	7225	NO RAMP
100,000	54575	7225	RAMP SEE SHEET S-303

CAPACITIES ARE BASED ON MINIMUM USEABLE FUEL SPACE (NET CAPACITY)

DESIGNER NOTES:

1. SEIMIC LOADING IS SITE SPECIFIC. TANK DESIGN IS TO BE MODIFIED ACCORDINGLY.
2. THE SNOW, WIND AND ROOF LOADING SHALL BE CHECKED AGAINST LOCAL CONDITIONS AND THE TANK DESIGN SHALL BE MODIFIED ACCORDINGLY.
3. FROST DEPTH AND FOUNDATION SHALL BE BASED ON SITE CONIDITIONS.
4. THE PUMPHOUSE/TANK HAS NOT BEEN DESIGNED FOR BLAST LOADINGS AND SHALL BE ANALYZED PER SPECIFIC THREAT REQUIREMENTS.
5. ORIENTATION OF NORTH ARROW WILL NEED ADJUSTED BASED ON LOCATION.
6. API DESIGN METAL TEMPERATURE SHALL BE MODIFIED AS PER LOCAL CONDITIONS.
7. REFERENCED SPECIFICATIONS ARE NOT PART OF THE STANDARD BUT SHALL BE EDITED AS REQUIRED PER PROJECT.
8. VEHICULAR LOADING ABOVE TANKS WERE NOT USED AS A DESIGN LOAD.
9. DETAILS SHOWN ON FOLLOWING EXCLUDING RAMP DRAWINGS ARE ONLY FOR 10,000 BBL TANKS. IT IS ASSUMED THAT THE DETAILS FOR THE OTHER TANKS LARGER THAN 10,000 BBL LISTED IN THE TANK SCHEDULE WILL BE SIMILAR BUT WILL NEED TO BE DESIGNED AS PER APPLICATION.
10. UPLIFT EFFECTS DUE TO LOCAL GROUNDWATER TABLE NEED TO BE CHECKED PER DESIGN.
11. PRECAST PANELS SHALL BE PERFORMANCE DESIGN IN PRECAST CONCRETE SPECIFICATIONS TO LOCAL LOADING CONDITIONS.

DESIGN NOTES:

1. SNOW LOADS (UFC 3-310-01 AND ASCE 7-02)
   A. GROUND SNOW LOAD — Pf=1.44 kPa
   B. EXPOSURE FACTOR — Ce=1.0
   C. THERMAL FACTOR — Ct=1.1
   D. IMPORTANCE FACTOR — I=1.2
   E. UNIFORM ROOF SNOW LOAD — Ps=1.44 kPa
2. WIND LOADS (UFC 3-310-01 AND ASCE 7-02)
   A. BASIC WIND SPEED — V=40 m/s (3 SECOND GUST)
   B. IMPORTANCE FACTOR — I=1.15
   C. EXPOSURE FACTOR — C
   D. CATEGORY — III
3. SEISMIC LOADS (UFC 3-310-03A AND CHAPTER 14 OF FEMA 369)
   A. SEISMIC USE GROUP III
   B. Ss = 0.30
   C. S1 = 0.13
   D. SITE CLASSIFICATION "D"
   E. SEISMIC DESIGN CATEGORY "D"
4. LIVE LOADS
   A. PUMPHOUSE ROOF 2.4 kPa
   B. PUMPHOUSE FLOOR 4.8 kPa
   C. TANK ROOF SLAB 4.8 kPa
   VEHICLE LOADING NOT APPLIED TO TANK ROOF SLAB
5. SOIL LOADS & FOUNDATION DATA
   A. TANK ROOF (TYPICAL) 9.6 kPa
   B. TANK ROOF (FUEL PIPE LOCATIONS WITH 1000mm COVER) 35.9 kPa
   C. SOIL DENSITY 17.3 kPa/m
   D. Ko (AT REST PRESSURE COEFFICIENT) 0.6
   E. LATERAL PRESSURE ON CONCRETE SHELL 9.4 kPa/m
   F. ALLOWABLE SOIL EXCESS BEARING PRESSURE 119.7 kPa MAX. (FULL DEAD AND LIVE LOAD)
   G. DESIGN FOUNDATION DEPTH (BELOW FINISHED GRADE) = 900
6. SPECIFIC GRAVITY OF LIQUID STORED 0.82 (8.2 kPa/m)

MATERIAL NOTES

CONCRETE AND REINFORCEMENT: (SHALL CONFORM TO ACI 318-05)
1. SPECIFIED COMPRESSIVE STRENGTH, f'c = 28 MPa PSI AT 28 DAYS TYP.
2. REINFORCING STEEL: SPECIFIED YIELD STRENGTH, Fy = 420 MPa (GRADE 420).
3. LAP SPLICES AND CONCRETE COVER OF REINFORCEMENT SHALL CONFORM TO ACI 318-05 USING CLASS B TENSION SPLICES UNLESS OTHERWISE NOTED. SEE TABLE, THIS SHEET.
4. TANK BOTTOM SLAB SHALL BE PLACE ON A 100mm CONCRETE LEVELING SLAB, MEMBRANE WATERPROOFING AND 50mm OF GROUT TO PROTECT THE WATERPROOFING. TANK BOTTOM SLAB SHALL RECEIVE A STEEL TROWEL FINISH.
5. TANK TOP SLAB SHALL RECEIVE MEMBRANE WATERPROOFING AND 50mm OF GROUT TO PROTECT THE WATERPROOFING. TANK TOP SLAB SHALL RECEIVE A STEEL TROWEL FINISH.
6. EXTERIOR OF TANK WALL SHALL RECEIVE A CLASS B FINISH OR AS RECOMMENDED BY THE WATERPROOFING MEMBRANE SUPPLIER.
7. ALL FLOOR JOINTS IN THE PUMPHOUSE SHALL BE SEALED WITH SINGLE COMPONENT SILICON JOINT SEALANT.
8. TANK TOP SLAB SLOPE VARIES. SLAB THICKNESS IS 500 AT THE PUMPHOUSE AND 350 AT THE PERIMETER OF THE TANK. MINIMUM SLOPE IS 1%.
9. SEE SHEET S-202 FOR TANK ROOF SLAB REINFORCING AND CONSTRUCTION JOINT LOCATIONS.
10. ALL EXPOSED CONCRETE EDGES SHALL BE CAMFERED 19.

PRECAST CONCRETE PANELS: (SHALL CONFORM TO ACI 318-05)
1. MINIMUM COMPRESSIVE STRENGTH f'c = 34.5 MPa. AT 28 DAYS TYP.
2. PANELS AND CONNECTIONS TO STRUCTURE SHALL BE ABLE TO WITHSTAND A UNIFORM LATERAL LOAD OF 2.39 kPa.
3. PRECAST PANEL CONNECTIONS SHALL BE ABLE TO ACCOMENDATE DIFFERENTIAL MOVEMENT OF 19mm BETWEEN PRECAST PANEL SUPPORTING STRUCTURE.

STRUCTURAL STEEL: SHALL CONFORM TO AISC SPECIFICATIONS FOR STRUCTURAL STEEL BUILDINGS.
1. ROLLED PLATES AND SHAPES SHALL CONFORM TO ASTM A36M, Fy = 25O MPa.
2. STEEL PIPE COLUMNS SHALL CONFORM TO ASTM A 53, GRADE B, EXTRA STRONG
3. WELDED STEEL ANCHOR STUDS SHALL CONFORM TO ASTM A108.
4. ANCHOR BOLTS AND OTHER UNFINISHED BOLTS SHALL CONFORM TO ASTM A-307.
5. EXPANSION BOLTS SHALL CONFORM TO CID 1923A TYPE 4. SIZE AS NOTED ON DRAWINGS.

STEEL TANK NOTES:
1. EXCEPT AS SHOWN OR MODIFIED HEREIN OR IN THE CONTRACT SPECIFICATIONS, THE TANK SHALL BE FABRICATED, ERECTED AND TESTED IN ACCORDANCE WITH AMERICAN PETROLEUM INSTITUTE STANDARD (API) 650. TENTH EDITION, NOV. 1998 W/ADDENDUMS 1,2 AND 3, WELDED STEEL TANKS FOR OIL STORAGE.
2. STEEL PLATES SHALL CONFORM TO THE REQUIREMENTS OF API 650, SECTION 2, BASED UPON THE DESIGN METAL TEMPERATURE.
3. SHELL PLATES AND ROOF PLATES SHALL HAVE A MINIMUM THICKNESS OF 6. BOTTOM PLATES SHALL HAVE A MINIMUM THICKNESS OF 8. PLATE JOINTS SHALL HAVE 100% PENETRATION WELDS. FILLET WELDED LAP JOINTS ARE NOT ALLOWED.
4. STAINLESS STEEL PLATES SHALL CONFORM TO ASTM A 240, TYPE 304
5. CAPACITY
   A. MAXIMUM CAPACITY = 2021 m^3 (12,700 BBL'S)
   B. NET WORKING CAPACITY = 1591 m^3 (10,000 BBL'S)
6. DESIGN METAL TEMPERATURE = -8.3° C
7. CORROSION ALLOWANCE = 0mm ROOF AND BOTTOM PLATES
   2mm SHELL PLATES
8. INTERIOR AND EXTERIOR SURFACES INCLUDING INTERSTITIAL SPACE OF THE TANK SHELL SHALL BE PROVIDED WITH A PROTECTIVE COATING.

CLASS "B" TENSION LAP SPLICE SCHEDULE		
BAR SIZE	TOP BARS (SEE NOTE 3)	ALL OTHER BARS
D13	830	640
D16	1020	790
D19	1240	950
D22	1440	1110

NOTES: 1. FOR USE IN TANK SLAB AND WALL CONSTRUCTION WHERE CLEAR COVER IS EQUAL OR GREATER THAN 50. (38 FOR D13 & D16 BARS)
2. NOT ALL BAR SIZES LISTED IN SCHEDULE MAY BE REQUIRED.
3. TOP BARS ARE HORIZONTAL BARS HAVING 300 OR MORE CONCRETE CAST BELOW THE BAR SPLICE.

GENERAL NOTES:
1. THE CONTRACTOR SHALL VERIFY ALL DIMENSIONS BEFORE STARTING WORK AND THE CONTRACTING OFFICER SHALL BE NOTIFIED IMMEDIATELY OF ANY DISCREPANCY.
2. STEEL TANK SHALL BE ERECTED AND WATER FILL TESTED PRIOR TO PLACEMENT OF CONCRETE WALL AND ROOF SLABS.
3. CONTRACTOR SHALL PROVIDE AND MAINTAIN ADEQUATE BRACING AND SHORING AT ALL TIMES DURING CONSTRUCTION.
4. CONTRACTOR SHALL BE RESPONSIBLE FOR DESIGN AND ERECTION OF SHORING TO SUPPORT THE ROOF AND WALL PLATES DURING ERECTION, WATER FILL TESTING OF THE TANK AND PLACEMENT OF THE ROOF SLAB AND CONCRETE WALLS. THE STEEL WALLS AND ROOF PLATES ARE NOT ADEQUATE TO SUPPORT FORMWORK PRESSURES DURING CONSTRUCTION OF THE CONCRETE WALLS.
5. CONTRACTOR SHALL BE RESPONSIBLE FOR DEWATERING OR PROVIDING BALLAST TO PREVENT FLOATATION OF THE TANK DURING ALL PHASES OF CONSTRUCTION.
6. STRUCTURAL DRAWINGS SHALL BE COORDINATED WITH ARCHITECTURAL, MECHANICAL, AND ELECTRICAL DRAWINGS FOR ADDITIONAL OPENINGS, SLEEVES, ETC. NOT SHOWN ON STRUCTURAL DRAWINGS. COORDINATE LOCATION, SIZE, AND REINFORCING OF ALL OPENINGS WITH RESPECTIVE TRADES BEFORE FABRICATION.
7. ALL DIMENSIONS ARE IN mm AND ELEVATIONS IN METERS UNLESS OTHERWISE NOTED.

US ARMY CORPS OF ENGINEERS
OMAHA DISTRICT

MARK	DESCRIPTION	DATE	APPR.

MARK	DESCRIPTION	DATE	APPR.

U. S. ARMY ENGINEER DISTRICT
CORPS OF ENGINEERS
OMAHA DISTRICT

DESIGNED BY: WRB | DATE: JULY 2010
DWN BY: WRB | CKD BY: BWH | SOLICITATION NO.: Y
SUBMITTED BY: WRB | CONTRACT NO.: Z
FILE NAME: auto_short_design | FILE NUMBER: X
SIZE: 841x559 | PLOT SCALE: auto_scale | PLOT DATE: auto_sytime

DOD, CUT'N'COVER STANDARDS
STORAGE TANK/PUMPHOUSE

TANK 1
ROOF PLAN AND GENERAL NOTES

SHEET IDENTIFICATION NUMBER
S-101

auto_design
auto_username

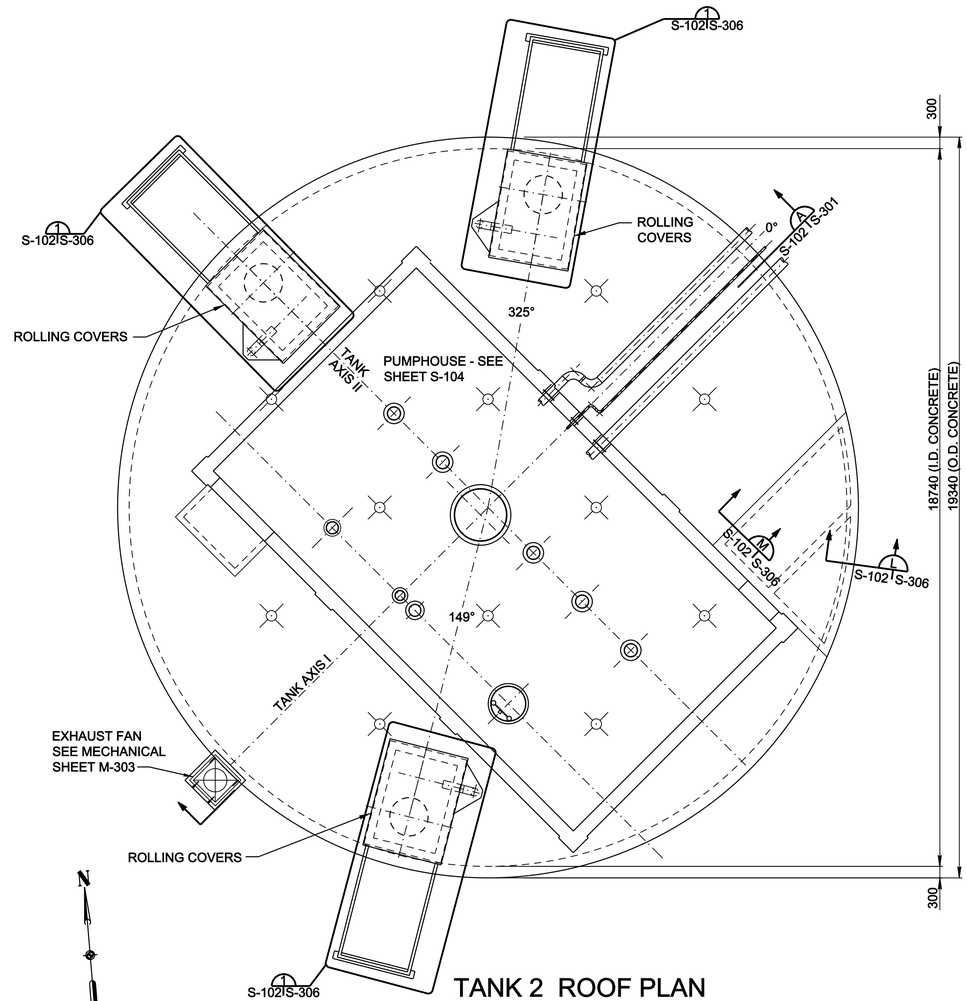

TANK 2 ROOF PLAN

0 1000 2000 4000

SCALE: 1:80

US ARMY CORPS OF ENGINEERS
OMAHA DISTRICT

MARK	DESCRIPTION	DATE	APPR.

MARK	DESCRIPTION	DATE	APPR.

U. S. ARMY ENGINEER DISTRICT
CORPS OF ENGINEERS
OMAHA DISTRICT

DESIGNED BY: W.R.B.
DWN BY: W.R.B.
CKD BY: BMH
SUBMITTED BY: B.M.H.
DATE: JULY 2010
SOLICITATION NO.: Y
CONTRACT NO.: Y
FILE NAME: auto_shortL_design
FILE NUMBER: X
SIZE: 841x559
PLOT SCALE: auto_scale
PLOT DATE: auto_sytime

DOD, CUTN'COVER STANDARDS
STORAGE TANK/PUMPHOUSE

TANK 2 ROOF PLAN

SHEET IDENTIFICATION NUMBER
S-102

auto_design
auto_username
auto_spacedesign

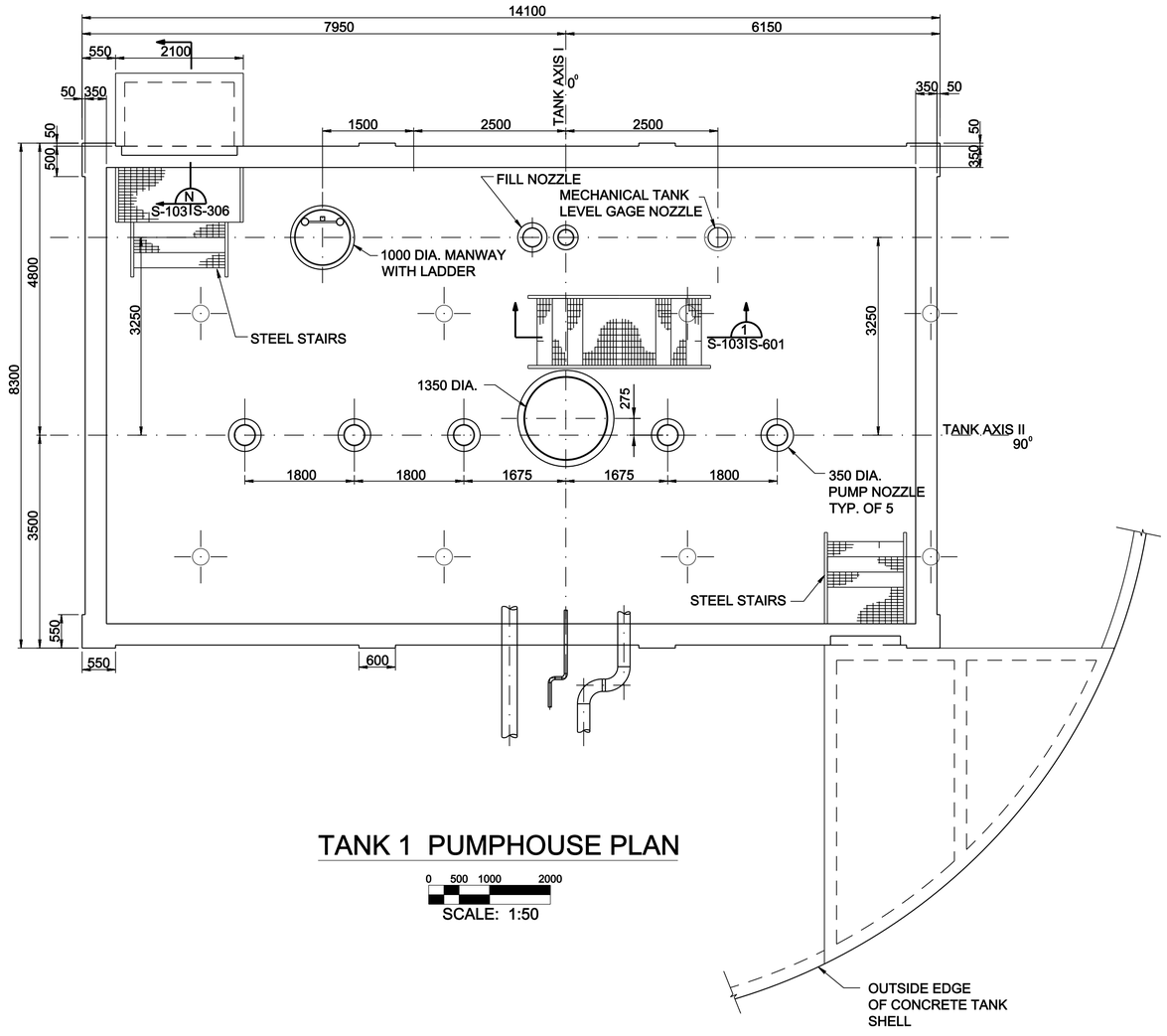

TANK 1 PUMPHOUSE PLAN

0 500 1000 2000

SCALE: 1:50

DESIGNER NOTES:

1. STEEL STAIRS ARE NOT DETAILED. THEREFORE, STAIRS NEED INCLUDED AS PERFORMANCE DESIGN IN MISCELLANEOUS METALS SPECIFICATION AS SHOP DRAWING SUBMITTAL.

2. STEEL STAIRS SHALL BE DESIGNED FOR A UNIFORM LIVE LOAD OF 2.4kPa AND CONCENTRATED LIVE LOAD OF 1.33 kN APPLIED AT ANY POINT.

US ARMY CORPS
OF ENGINEERS
OMAHA DISTRICT

MARK	DESCRIPTION	DATE	APPR.

MARK	DESCRIPTION	DATE	APPR.

U. S. ARMY ENGINEER DISTRICT
CORPS OF ENGINEERS
OMAHA DISTRICT

DESIGNED BY: W.R.B.
DWN BY: W.R.B.
CKD BY: B.M.H.
SUBMITTED BY: B.M.H.
FILE NAME: auto_short_design
SIZE: 841x259
PLOT SCALE: auto_scale
DATE: JULY 2010
SOLICITATION NO.: X
CONTRACT NO.: X
FILE NUMBER: X
PLOT DATE: auto_sytime

DOD, CUT'N'COVER STANDARDS
STORAGE TANK/PUMPHOUSE

TANK 1
PUMPHOUSE PLAN

SHEET
IDENTIFICATION
NUMBER
S-103

auto_username auto_design

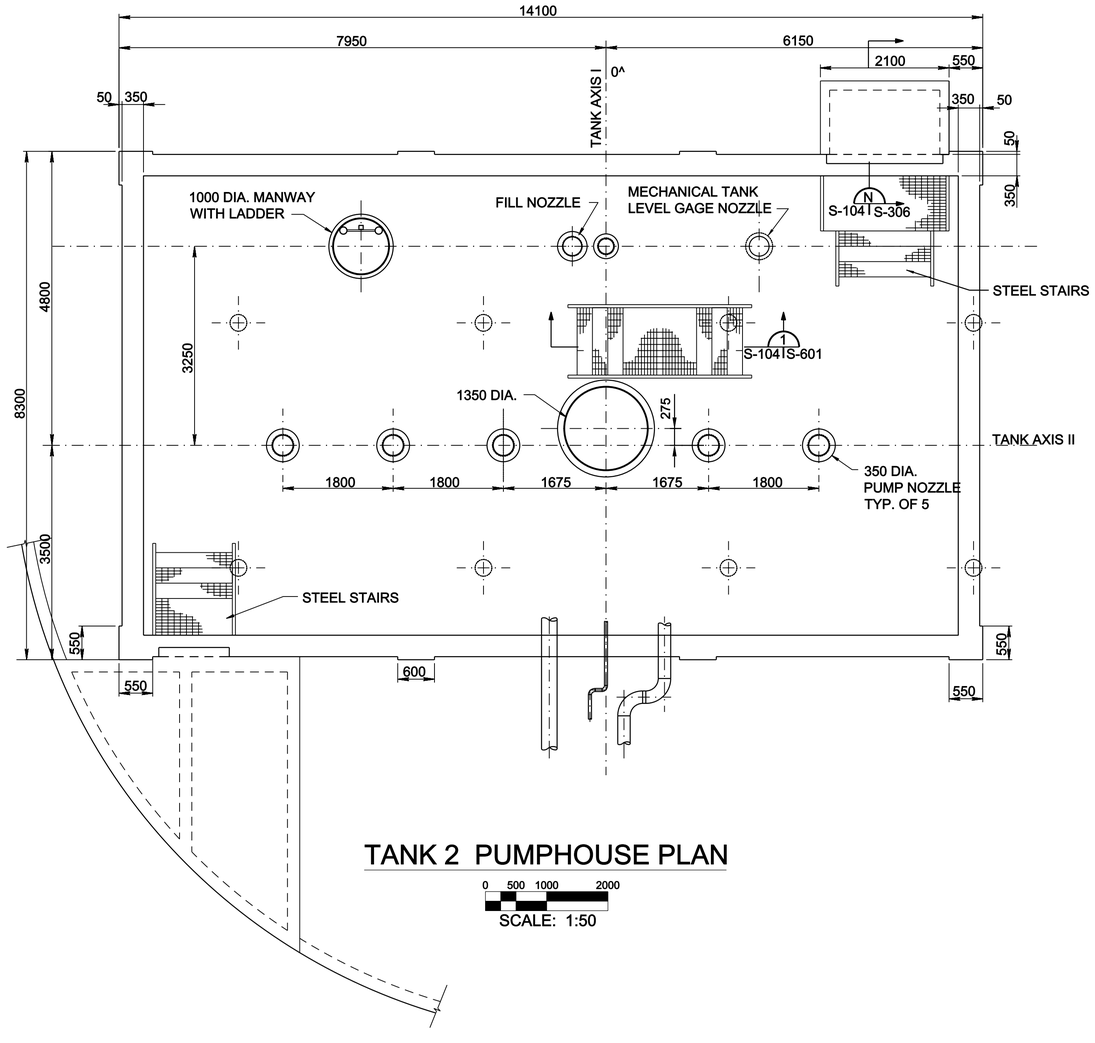

TANK 2 PUMPHOUSE PLAN

0 500 1000 2000

SCALE: 1:50

DESIGNER NOTES:

1. STEEL STAIRS ARE NOT DETAILED. THEREFORE, STAIRS NEED INCLUDED AS PERFORMANCE DESIGN IN MISCELLANEOUS METALS SPECIFICATION AS SHOP DRAWING SUBMITTAL.

2. STEEL STAIRS SHALL BE DESIGNED FOR A UNIFORM LIVE LOAD OF 2.4kPa AND CONCENTRATED LIVE LOAD OF 1.33 kN APPLIED AT ANY POINT.

US ARMY CORPS OF ENGINEERS
OMAHA DISTRICT

MARK	DESCRIPTION	DATE	APPR.

MARK	DESCRIPTION	DATE	APPR.

U. S. ARMY ENGINEER DISTRICT
CORPS OF ENGINEERS
OMAHA DISTRICT

DESIGNED BY: W.R.B.
DWN BY: W.R.B.
CKD BY: B.M.H.
SUBMITTED BY: B.M.H.
DATE: JULY 2010
SOLICITATION NO.: X
CONTRACT NO.: X
FILE NAME: auto_short_design
FILE NUMBER: X
SIZE: 841x559
PLOT SCALE: auto_scale
PLOT DATE: auto_sytime

DOD, CUT'N'COVER STANDARDS
STORAGE TANK/PUMPHOUSE

TANK 2
PUMPHOUSE PLAN

SHEET IDENTIFICATION NUMBER
S-104

auto_username auto_design

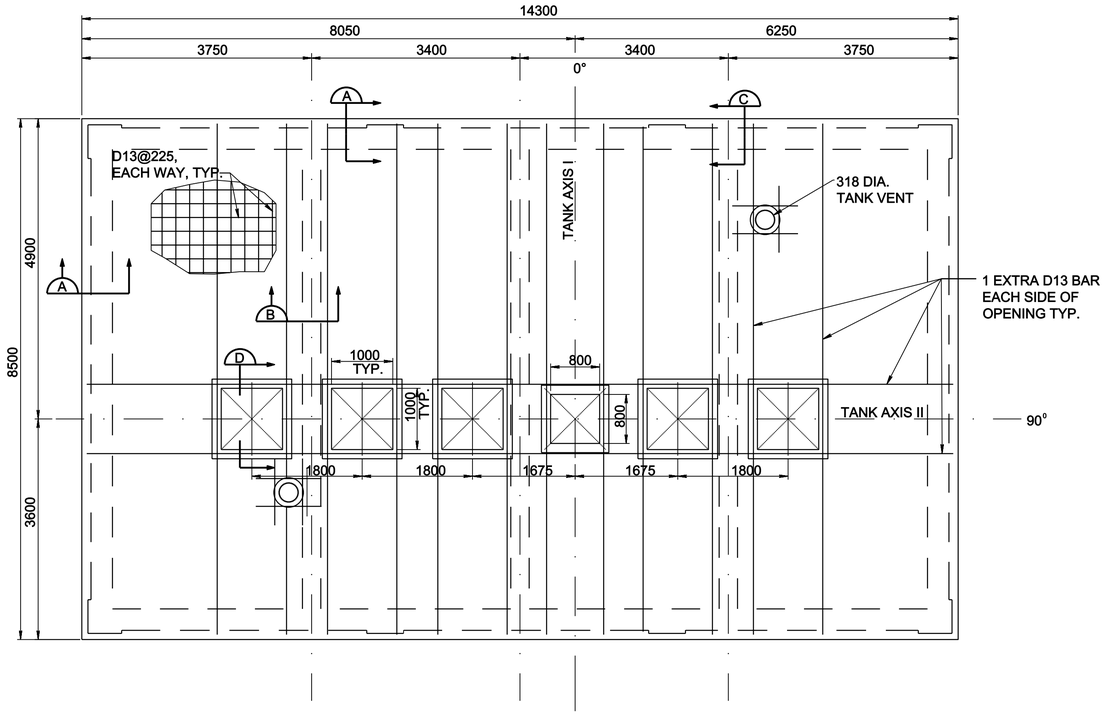

PUMPHOUSE ROOF PLAN

SCALE: 1:50

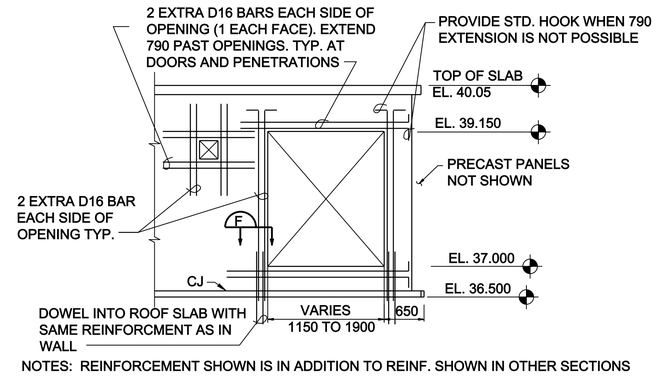

NOTES: REINFORCEMENT SHOWN IS IN ADDITION TO REINF. SHOWN IN OTHER SECTIONS

TYPICAL REINFORCING AT DOORS AND WALL PENETRATIONS

SCALE: 1:50

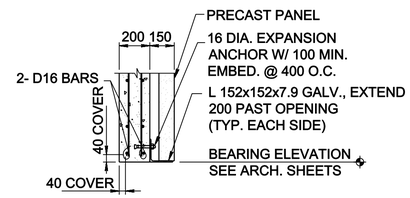

TYPICAL LINTEL

SCALE: 1:20

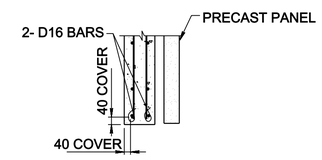

SECTION F

SCALE: 1:20

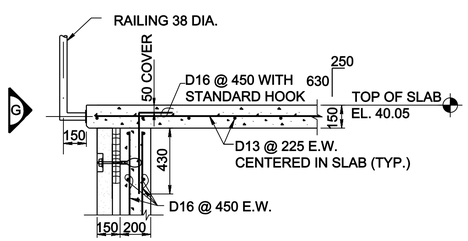

SECTION A

SCALE: 1:20

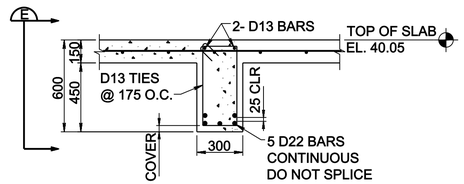

SECTION B

SCALE: 1:20

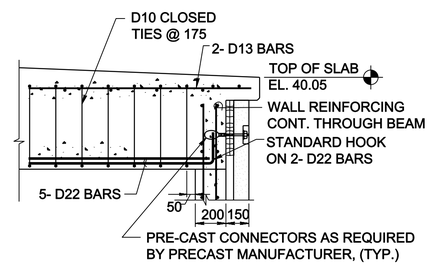

SECTION C

SCALE: 1:20

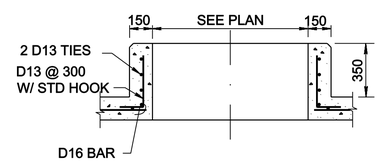

SECTION D

ROOF SCUTTLE NOT SHOWN

SCALE: 1:20

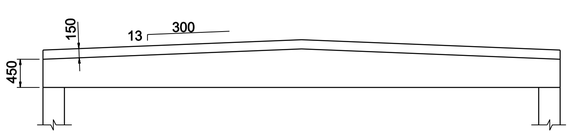

SECTION E

SCALE: 1:50

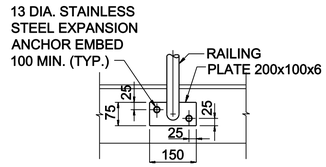

ELEVATION G

SCALE: 1:10

DESIGNER NOTES:

1. ELEVATIONS SHALL BE ADJUSTED FOR SITE SPECIFIC TERRAIN.

2. ROOF SCUTTLE NEEDS TO BE INCLUDED IN SPECIFICATIONS.

US ARMY CORPS OF ENGINEERS
OMAHA DISTRICT

MARK	DESCRIPTION	DATE	APPR.

MARK	DESCRIPTION	DATE	APPR.

U. S. ARMY ENGINEER DISTRICT
CORPS OF ENGINEERS
OMAHA DISTRICT

DESIGNED BY: W.R.B.
DWN BY: W.R.B.
CKD BY: B.N.H.
SUBMITTED BY: B.N.H.
FILE NAME: OD395-105.dwg
SIZE: 841x589
PLOT SCALE: 1 = / mm
DATE: JULY 2010
SOLICITATION NO.: Y
CONTRACT NO.: Y
FILE NUMBER: X
PLOT DATE: 7/21/2010

DOD, CUTN'COVER STANDARDS
STORAGE TANK/PUMPHOUSE

PUMPHOUSE ROOF PLAN

SHEET IDENTIFICATION NUMBER
S-105

I:\dwgs\struct\OD395-105.dwg

g6edcnd

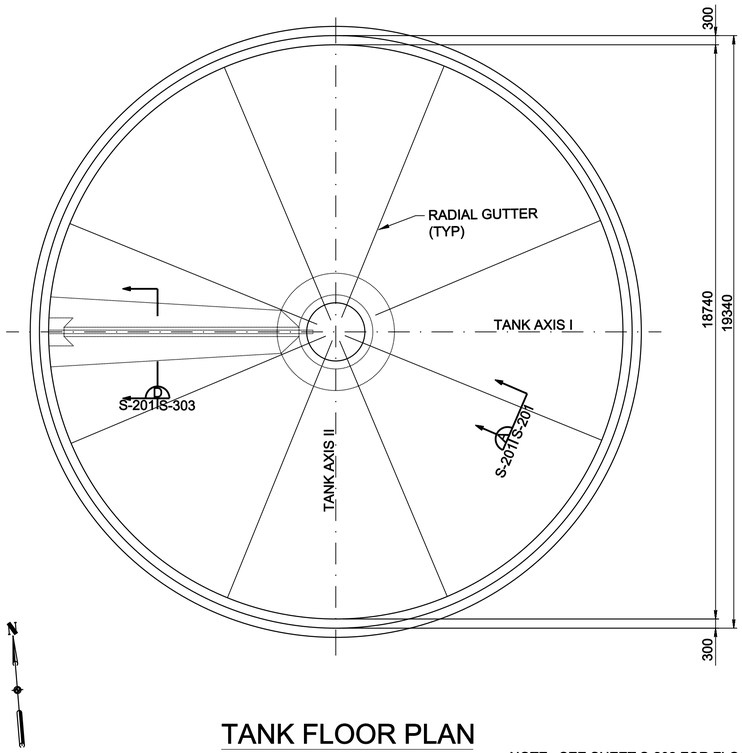

TANK FLOOR PLAN

0 1000 2000 4000
SCALE: 1:100

NOTE: SEE SHEET S-202 FOR FLOOR SLAB REINFORCING AND CONSTRUCTION JOINT LOCATIONS.

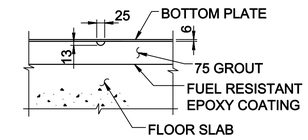

SECTION A
S-201 S-201
S-303

0 100 200 400
SCALE: 1:10

US ARMY CORPS
OF ENGINEERS
OMAHA DISTRICT

MARK	DESCRIPTION	DATE	APPR.

MARK	DESCRIPTION	DATE	APPR.

U. S. ARMY ENGINEER DISTRICT
CORPS OF ENGINEERS
OMAHA DISTRICT

DESIGNED BY: W.R.B.
DWN BY: W.R.B.
CKD BY: B.M.H.
SUBMITTED BY: B.M.H.
DATE: JULY 2010
SOLICITATION NO.: Y
CONTRACT NO.: Y
FILE NAME: auto_shor1_design
FILE NUMBER: X
SIZE: 841x559
PLOT SCALE: auto_scale
PLOT DATE: auto_sytime

DOD, CUTN'COVER STANDARDS
STORAGE TANK/PUMPHOUSE

TANK FLOOR SLAB PLAN

SHEET IDENTIFICATION NUMBER
S-201

auto_username auto_design

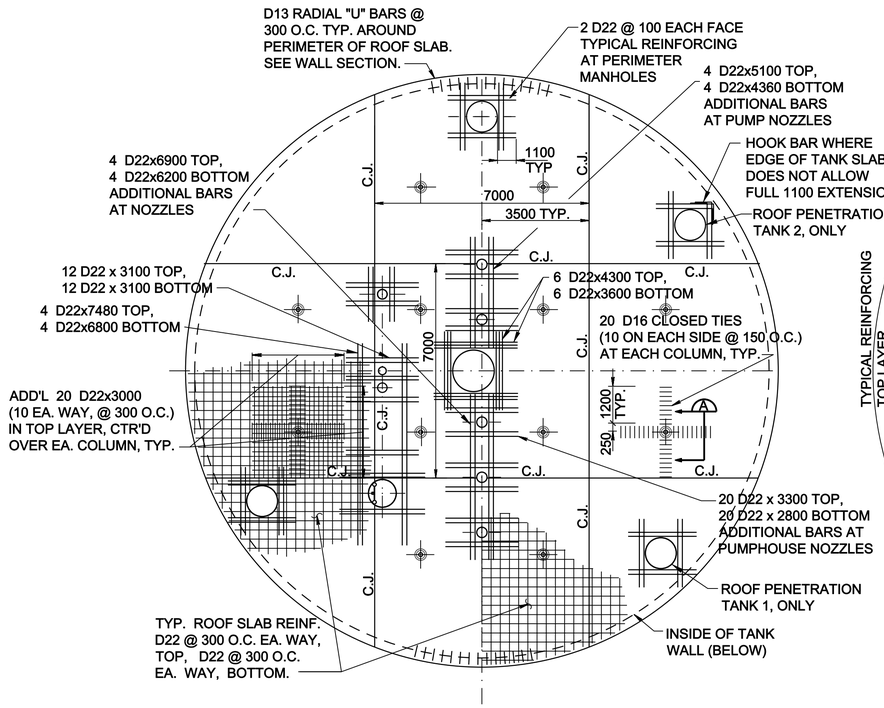

TANK ROOF SLAB REINFORCING PLAN

0 1000 2000 4000
SCALE: 1:100

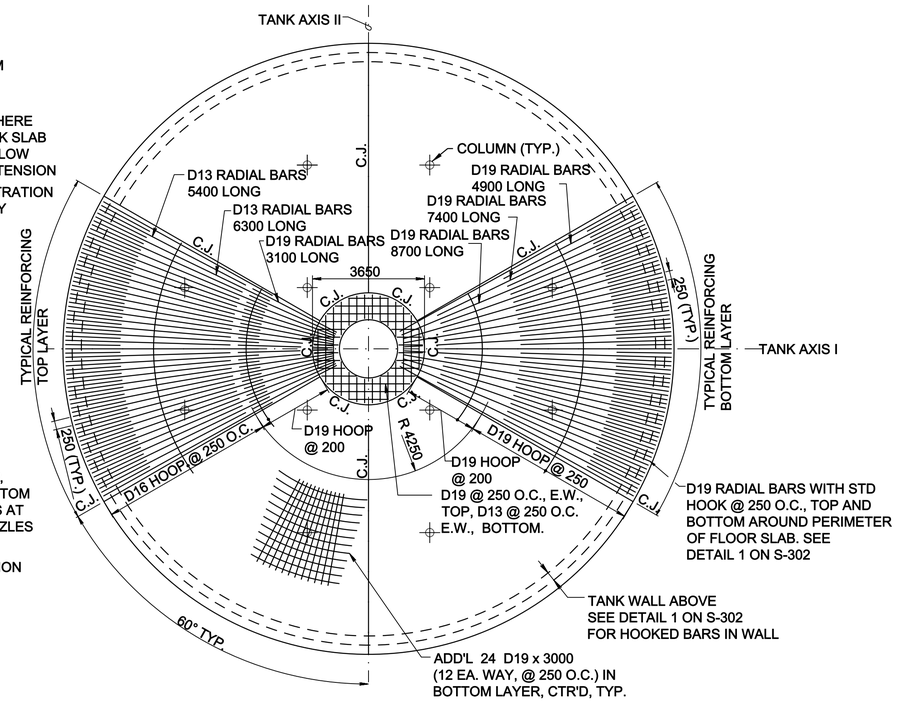

TANK FLOOR SLAB REINFORCING PLAN

0 1000 2000 4000
SCALE: 1:100

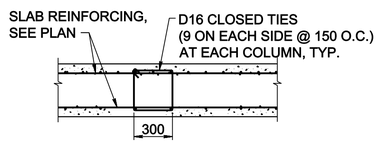

SECTION A

NO SCALE

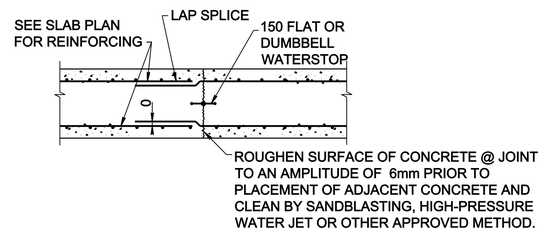

SLAB CONSTRUCTION JOINT (C.J.)

NO SCALE

US ARMY CORPS OF ENGINEERS
OMAHA DISTRICT

MARK	DESCRIPTION	DATE	APPR.

MARK	DESCRIPTION	DATE	APPR.

U. S. ARMY ENGINEER DISTRICT
CORPS OF ENGINEERS
OMAHA DISTRICT

DESIGNED BY: W.R.B.
DWN BY: W.R.B.
CKD BY: B.H.H.
SUBMITTED BY: B.H.H.
FILE NAME: auto_shor1_design
SIZE: 841x559
PLOT SCALE: auto_scale
DATE: JULY 2010
SOLICITATION NO.: Y
CONTRACT NO.: Y
FILE NUMBER: X
PLOT DATE: auto_sytime

DOD, CUTN'COVER STANDARDS
STORAGE TANK/PUMPHOUSE

ROOF AND FLOOR SLAB REINFORCING PLAN

SHEET IDENTIFICATION NUMBER
S-202

auto_username auto_design

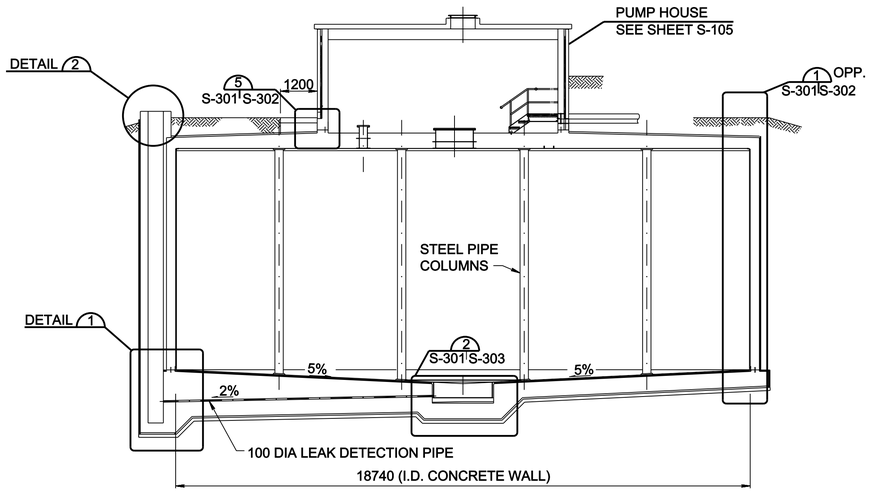

SECTION A

S-102 S-301
S-101

0 1000 2000 4000
SCALE: 1:100

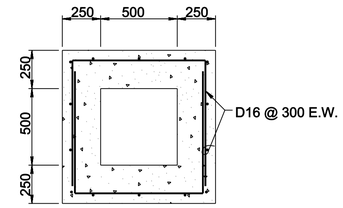

SECTION A

0 200 400 800
SCALE: 1:20

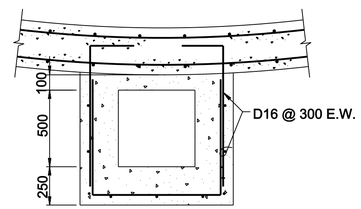

SECTION D

0 200 400 800
SCALE: 1:20

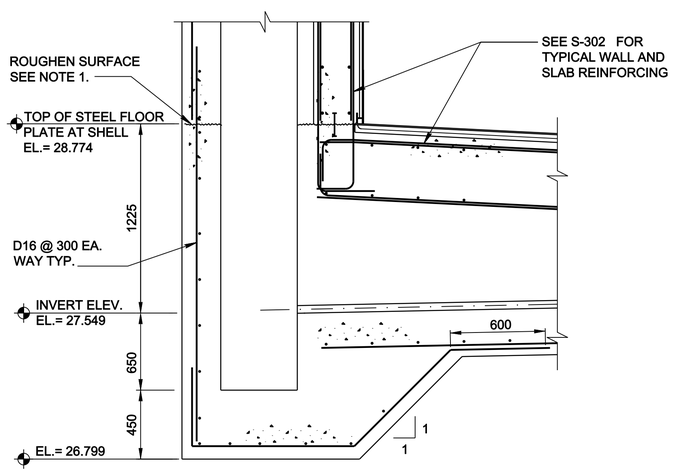

DETAIL 1

0 200 400 800
SCALE: 1:20

NOTES:
1. ROUGHEN SURFACE OF CONCRETE @ JOINT TO AN AMPLITUDE OF 6.5MM PRIOR TO PLACEMENT OF ADJACENT CONCRETE AND CLEAN BY SANDBLASTING, HIGH-PRESSURE WATER JET OR OTHER APPROVED METHOD.
2. MEMBRANE WATERPROOFING, PROTECTION BOARD, AND GROUT NOT SHOWN IN SECTIONS. SEE SHEET S-101 FOR ADDITIONAL INFORMATION.

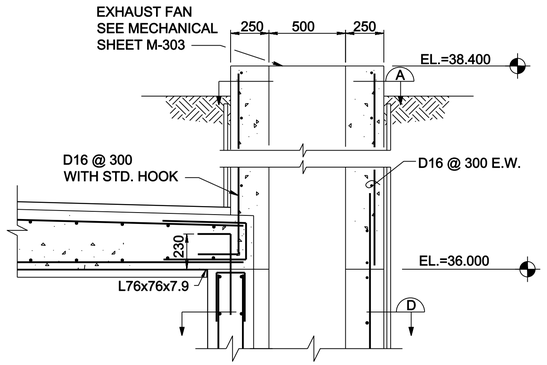

DETAIL 2

0 200 400 800
SCALE: 1:20

DESIGNER NOTES:

1. ELEVATIONS SHALL BE ADJUSTED FOR SITE SPECIFIC TERRAIN.

US ARMY CORPS
OF ENGINEERS
OMAHA DISTRICT

MARK	DESCRIPTION	DATE	APPR.

MARK	DESCRIPTION	DATE	APPR.

U. S. ARMY ENGINEER DISTRICT
CORPS OF ENGINEERS
OMAHA DISTRICT

DESIGNED BY: W.R.B.
DWN BY: W.R.B.
CKD BY: B.N.H.
SUBMITTED BY: B.N.H.
FILE NAME: OD395-301.dwg
SIZE: 841x569
PLOT SCALE: 1 = / mm
DATE: JULY 2010
SOLICITATION NO.: Y
CONTRACT NO.: Y
FILE NUMBER: X
PLOT DATE: 7/21/2010

DOD, CUTN'COVER STANDARDS
STORAGE TANK/PUMPHOUSE

TANK SECTION AND DETAILS

SHEET IDENTIFICATION NUMBER
S-301

I:\dwgs\struct\OD395-301.dwg
g6edsncd

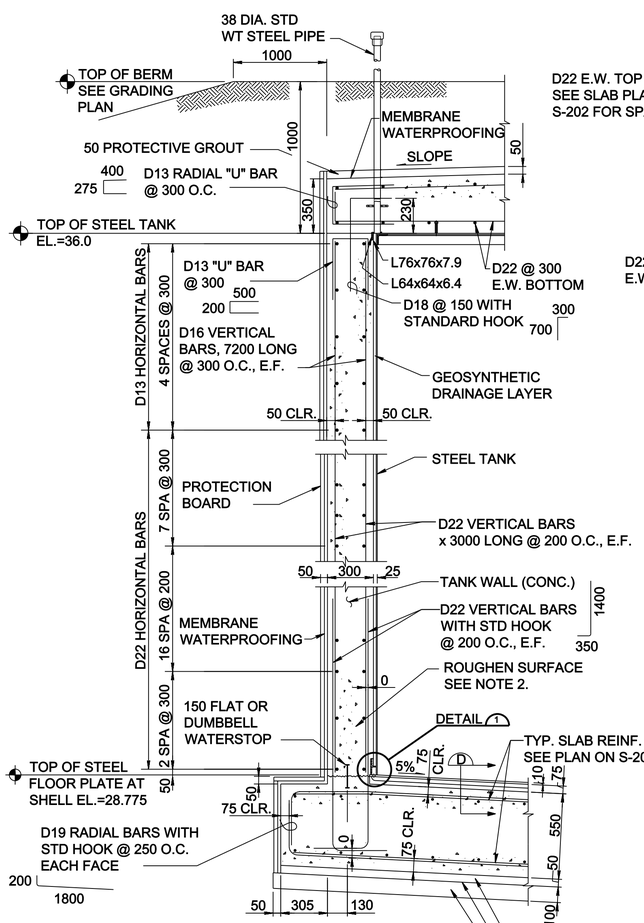

DETAIL 1
S-301 | S-302
SCALE: 1:20

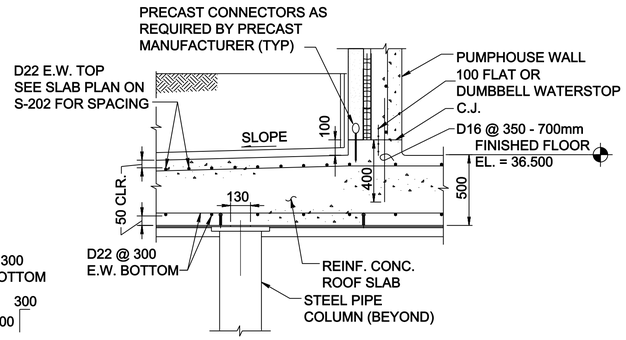

DETAIL 5
S-103 | S-302
S-104
S-301
SCALE: 1:20

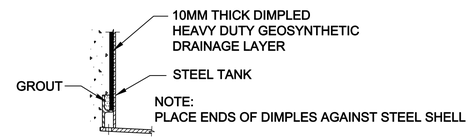

DETAIL 1
SCALE: 1:10

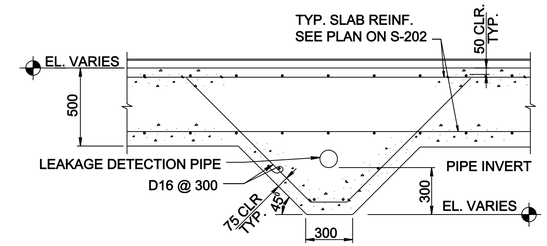

SECTION D
SCALE: 1:20

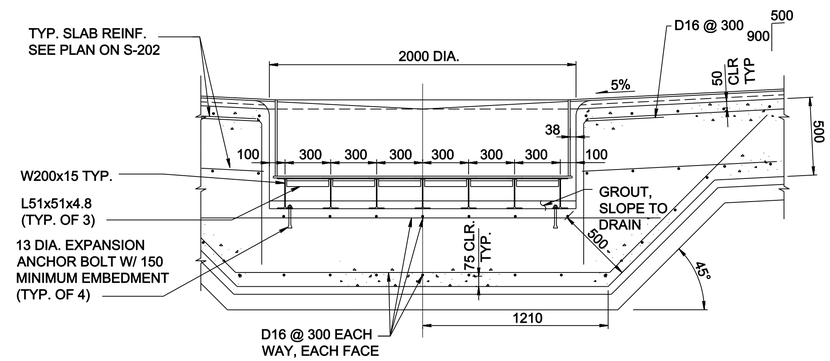

SECTION A
SCALE: 1:20

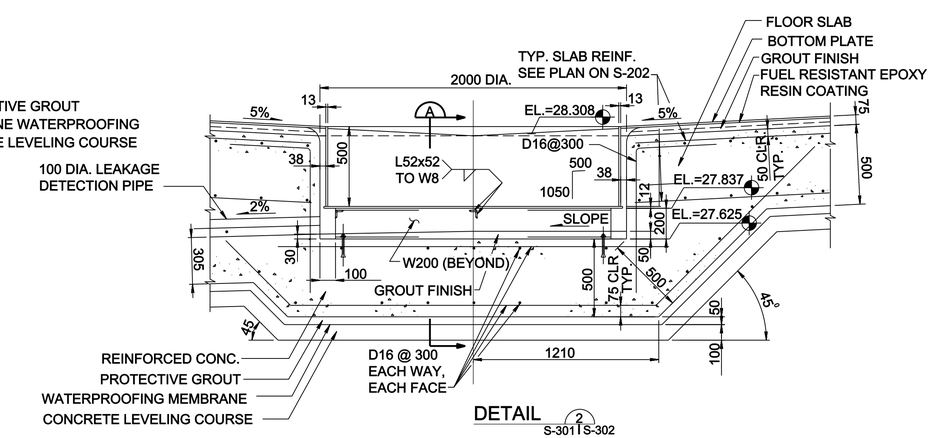

DETAIL 2
S-301 | S-302
SCALE: 1:20

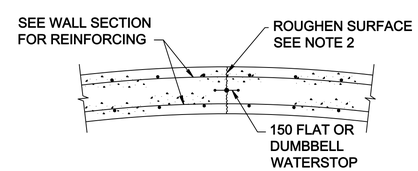

TANK WALL CONSTRUCTION JOINT (C.J.)
SCALE: 1:20

NOTES:
1. HORIZONTAL BARS IN TANK WALL SHALL HAVE CLASS "B" TENSION LAP SPLICES. SPLICES IN ADJACENT HORIZONTAIL BARS SHALL BE SPACED A MINIMUM OF 750. DO NOT SPLICE HORIZONTAL BARS AT CONSTRUCTION JOINT. SEE SHEET S-202.
2. ROUGHEN SURFACE OF CONCRETE @ JOINT TO AN AMPLITUDE OF 6mm PRIOR TO PLACEMENT OF ADJACENT CONCRETE AND CLEAN BY SANDBLASTING, HIGH-PRESSURE WATER JET OR OTHER APPROVED METHOD.

DESIGNER NOTES:

1. ELEVATIONS SHALL BE ADJUSTED FOR SITE SPECIFIC TERRAIN.

2. DETAILS ARE FOR 10,000 BBL TANKS. DETAILS MAY REQUIRE CHANGES FOR LARGER TANKS.

US ARMY CORPS
OF ENGINEERS
OMAHA DISTRICT

MARK	DESCRIPTION	DATE	APPR.

MARK	DESCRIPTION	DATE	APPR.

U. S. ARMY ENGINEER DISTRICT
CORPS OF ENGINEERS
OMAHA DISTRICT

DESIGNED BY: W.R.B. | DATE: JULY 2010
DWN BY: W.R.B. | CKD BY: B.N.H. | SOLICITATION NO.: Y
SUBMITTED BY: B.N.H. | CONTRACT NO.: Y
FILE NAME: 00395-302.dwg | FILE NUMBER: X
SIZE: 841x559 | PLOT SCALE: 1 " / mm | PLOT DATE: 7/21/2010

DOD, CUT'N'COVER STANDARDS
STORAGE TANK/PUMPHOUSE

TANK SECTIONS AND DETAILS

SHEET
IDENTIFICATION
NUMBER
S-302

i:\dwgs\struct\00395-302.dwg
g6edmcd

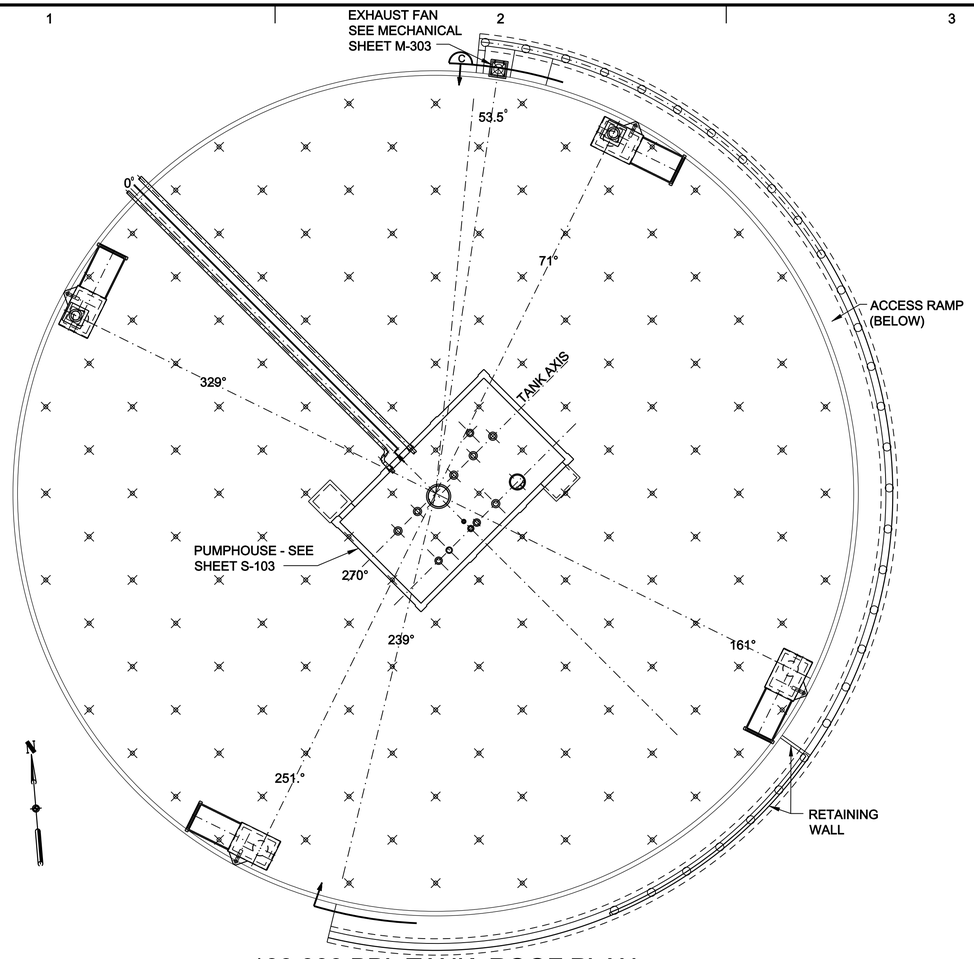

100,000 BBL TANK ROOF PLAN

0 2000 4000 8000
SCALE: 1:200

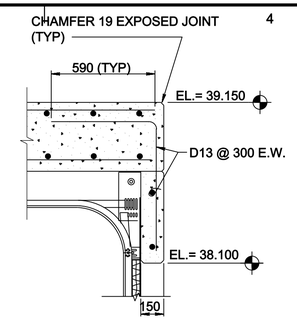

SECTION A

0 200 400 800
SCALE: 1:20

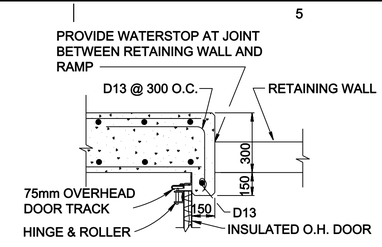

SECTION B

0 200 400 800
SCALE: 1:20

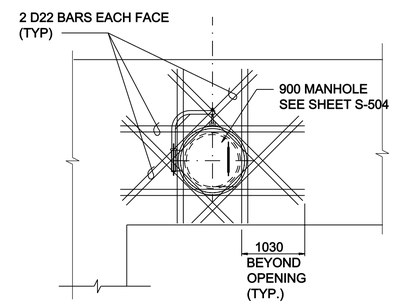

MANHOLE WALL ELEVATION

0 500 1000 2000
SCALE: 1:50

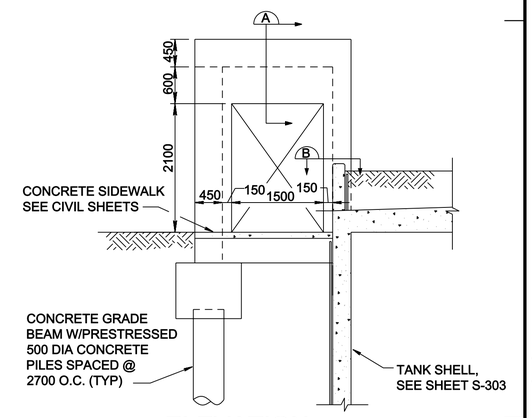

ELEVATION A

0 500 1000 2000
SCALE: 1:50

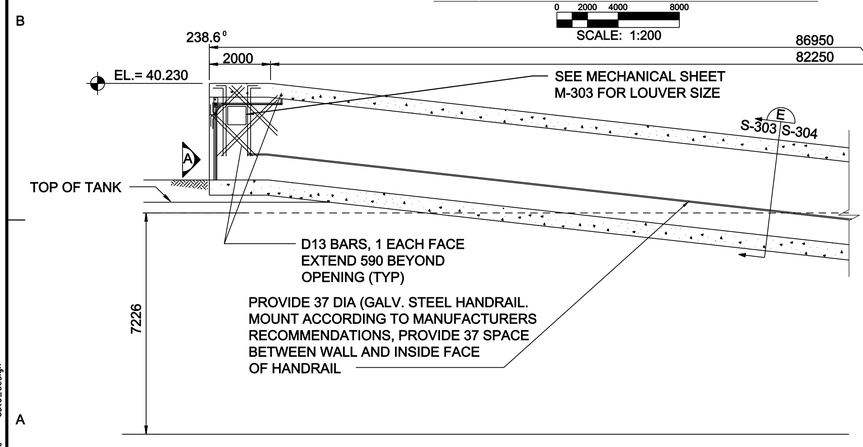

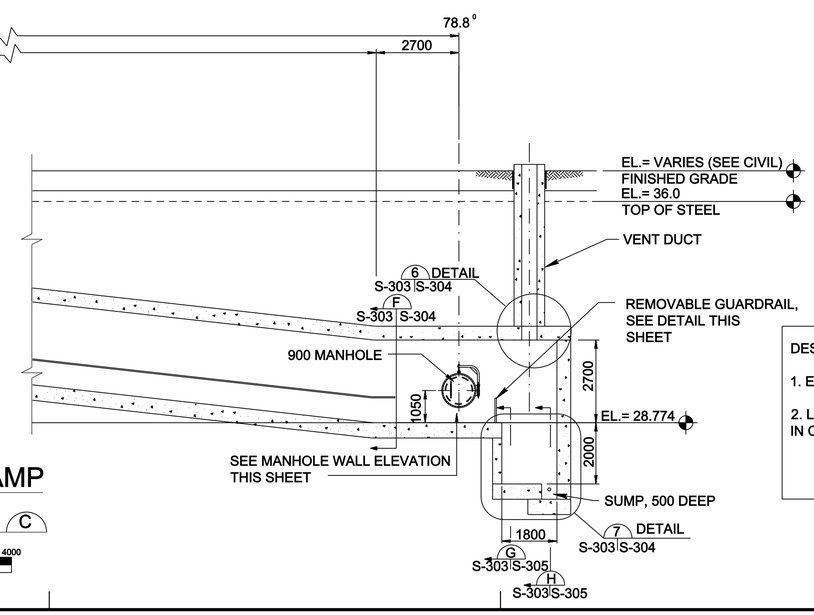

TANK #2 RAMP SECTION C

0 1000 2000 4000
SCALE: 1:100

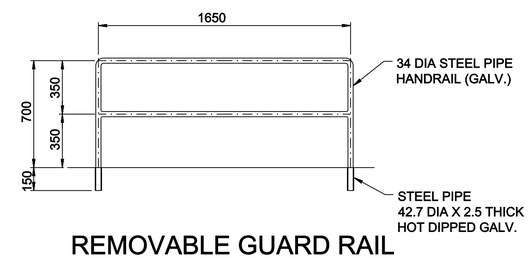

REMOVABLE GUARD RAIL

0 200 400 800
SCALE: 1:20

DESIGNER NOTES:

1. ELEVATIONS SHALL BE ADJUSTED FOR SITE SPECIFIC TERRIAN.

2. LOCATION AND NUMBER OF CONSTRUCTION JOINTS NEEDS COORDINATED IN CONCRETE SPECIFICATIONS.

US ARMY CORPS
OF ENGINEERS
OMAHA DISTRICT

MARK	DESCRIPTION	DATE	APPR.

MARK	DESCRIPTION	DATE	APPR.

U. S. ARMY ENGINEER DISTRICT
CORPS OF ENGINEERS
OMAHA DISTRICT

DESIGNED BY: WRB | DWN BY: WRB | CKD BY: BWH | SUBMITTED BY: WRB | FILE NAME: auto_short_design | FILE SIZE: 841x559 | PLOT SCALE: auto_scale | DATE: JULY 2010 | SOLICITATION NO.: Y | CONTRACT NO.: Y | FILE NUMBER: X | PLOT DATE: auto_sytime

DOD, CUT'N'COVER STANDARDS
STORAGE TANK/PUMPHOUSE

100,000 BBL TANK
PLAN AND RAMP DETAILS

SHEET IDENTIFICATION NUMBER
S-303

auto_design
auto_username

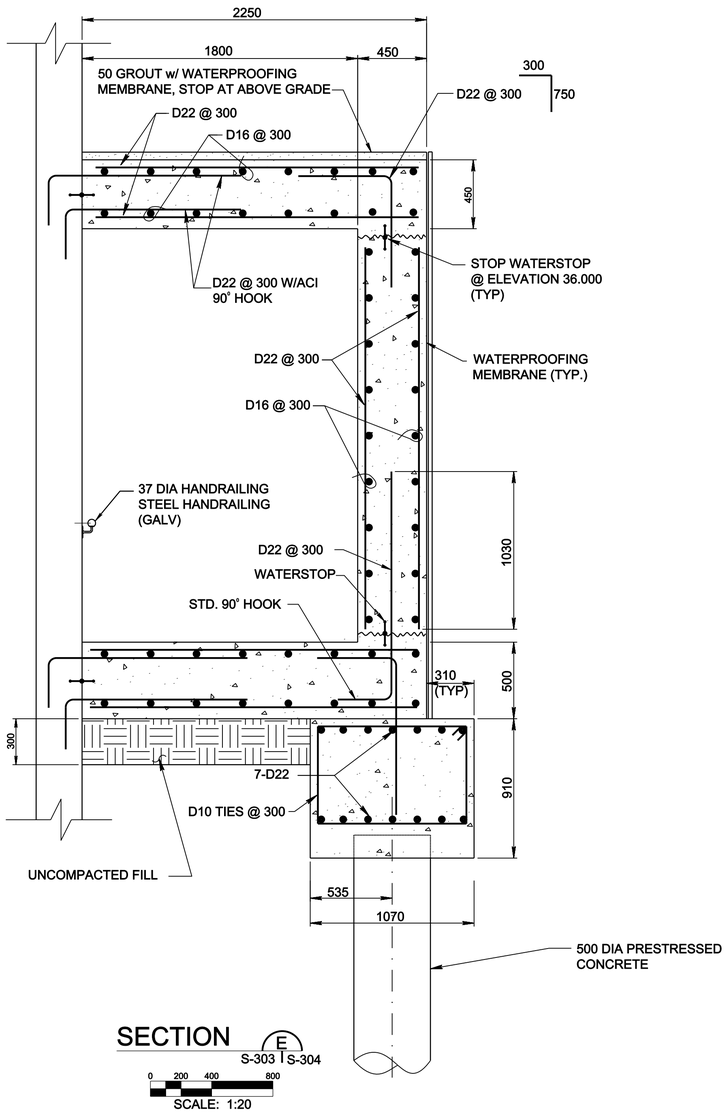

SECTION E
S-303 | S-304
0 200 400 800
SCALE: 1:20

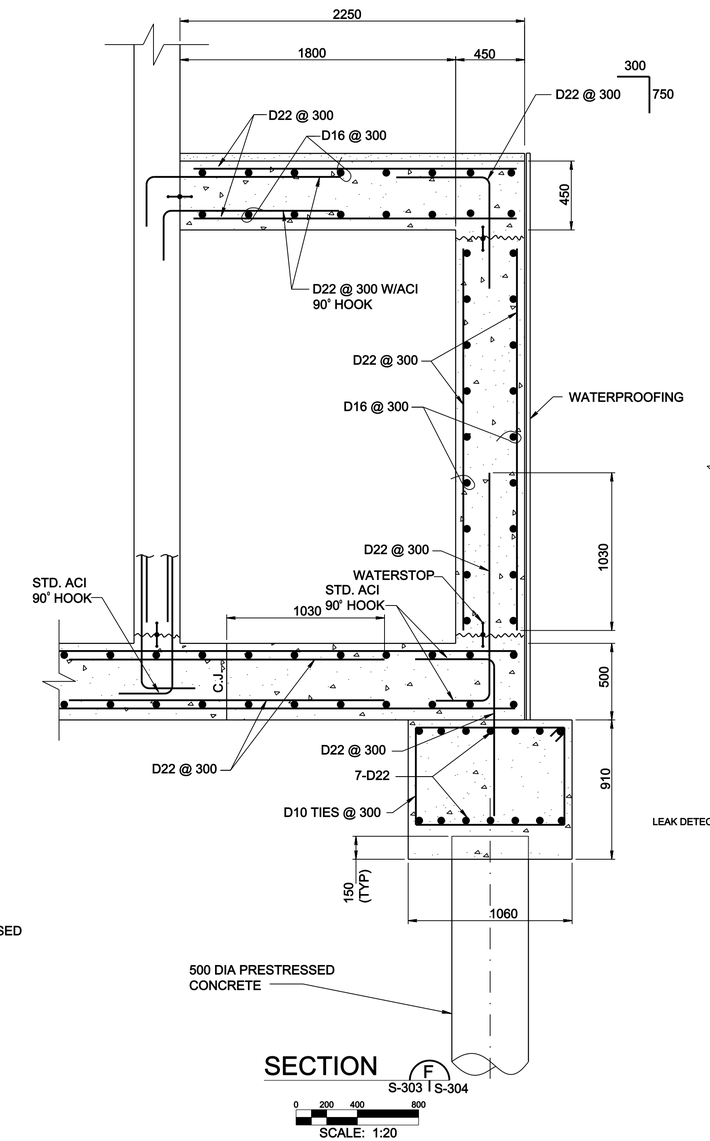

SECTION F
S-303 | S-304
0 200 400 800
SCALE: 1:20

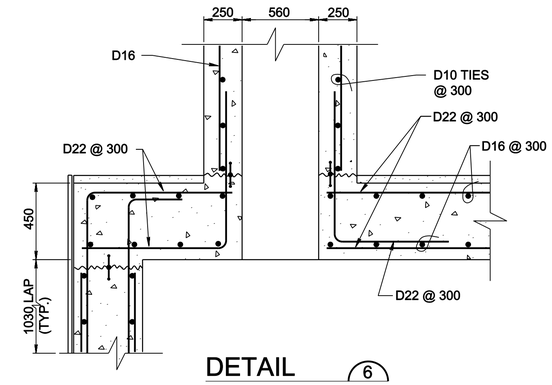

DETAIL 6
0 200 400 800
SCALE: 1:20

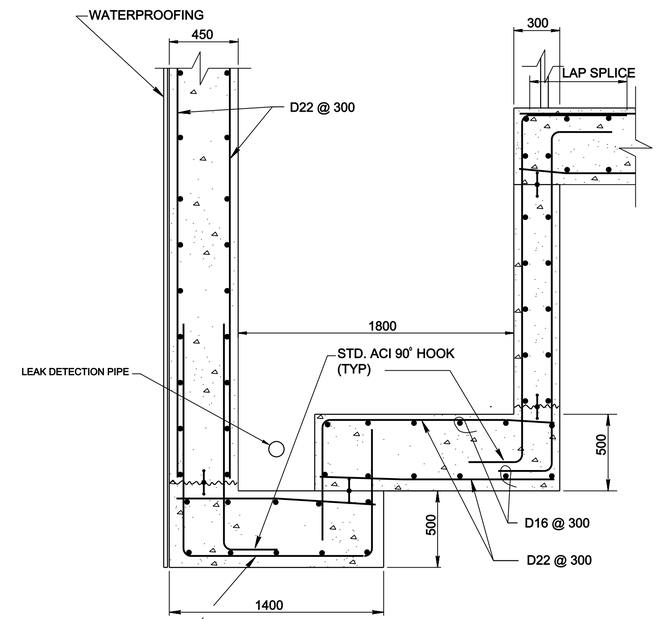

DETAIL 7
S-303 | S-304
0 200 400 800
SCALE: 1:20

US ARMY CORPS OF ENGINEERS
OMAHA DISTRICT

MARK	DESCRIPTION	DATE	APPR.

MARK	DESCRIPTION	DATE	APPR.

U. S. ARMY ENGINEER DISTRICT
CORPS OF ENGINEERS
OMAHA DISTRICT

DESIGNED BY: W.R.B.
DWN BY: W.R.B.
CKD BY: B.M.H.
SUBMITTED BY: B.M.H.
DATE: JULY 2010
SOLICITATION NO.: Y
CONTRACT NO.: Y
FILE NUMBER: X
FILE NAME: auto_short_design
SIZE: 841x259
PLOT SCALE: auto_scale
PLOT DATE: auto_sytime

DOD, CUT'N'COVER STANDARDS
STORAGE TANK/PUMPHOUSE

RAMP SECTIONS AND DETAILS

SHEET IDENTIFICATION NUMBER
S-304

auto_username auto_design

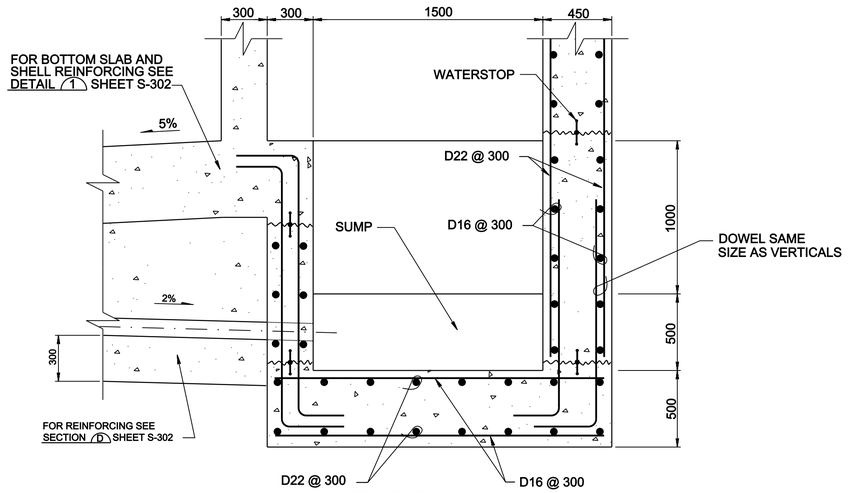

SECTION H
S-303 | S-305

0 200 400 800
SCALE: 1:20

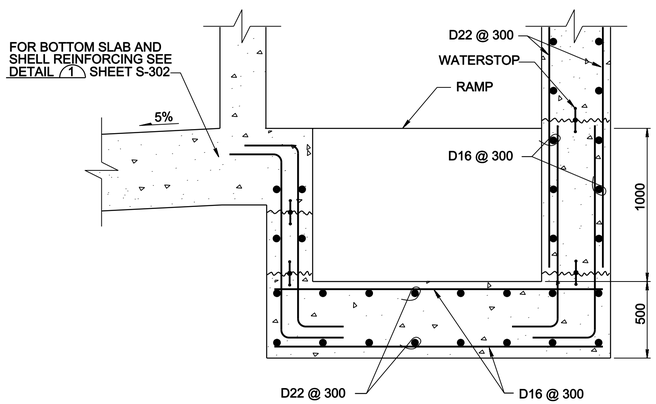

SECTION G
S-303 | S-305

0 200 400 800
SCALE: 1:20

US ARMY CORPS OF ENGINEERS
OMAHA DISTRICT

MARK	DESCRIPTION	DATE	APPR.

MARK	DESCRIPTION	DATE	APPR.

U. S. ARMY ENGINEER DISTRICT
CORPS OF ENGINEERS
OMAHA DISTRICT

DESIGNED BY: W.R.B.
DWN BY: W.R.B.
CKD BY: B.N.H.
SUBMITTED BY: B.N.H.
DATE: JULY 2010
SOLICITATION NO.: Y
CONTRACT NO.: Y
FILE NAME: auto_shor1_design
FILE NUMBER: X
SIZE: 841x559
PLOT SCALE: auto_scale
PLOT DATE: auto_sytime

DOD, CUTN'COVER STANDARDS
STORAGE TANK/PUMPHOUSE

RAMP SECTIONS AND DETAILS

SHEET IDENTIFICATION NUMBER
S-305

auto_usernome auto_design

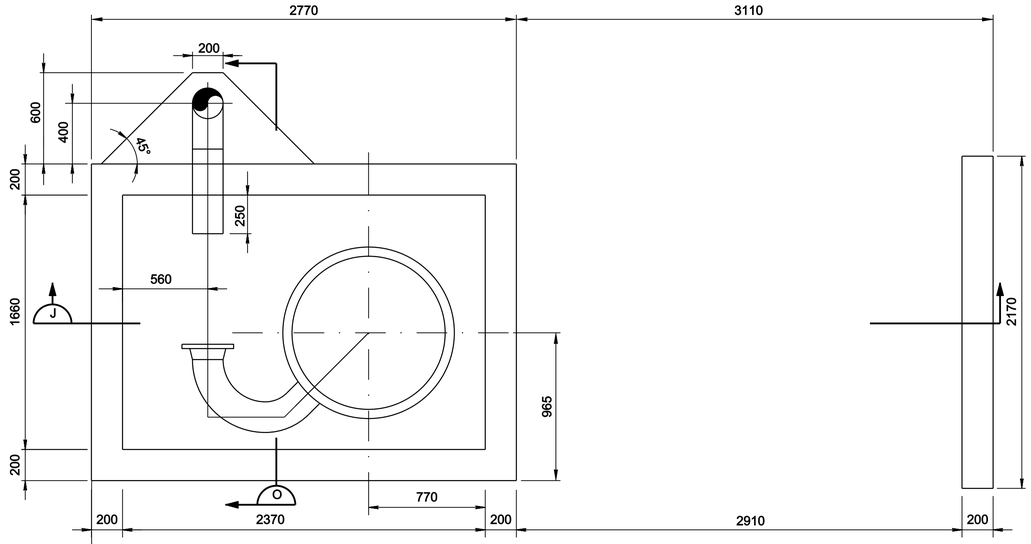

DETAIL 2 S-101 S-102 | S-306

SCALE: 1:20

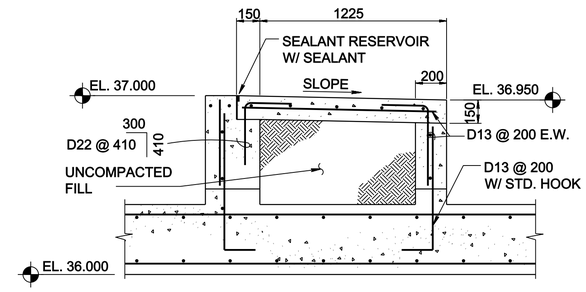

SECTION N S-103 S-104 | S-306

SCALE: 1:20

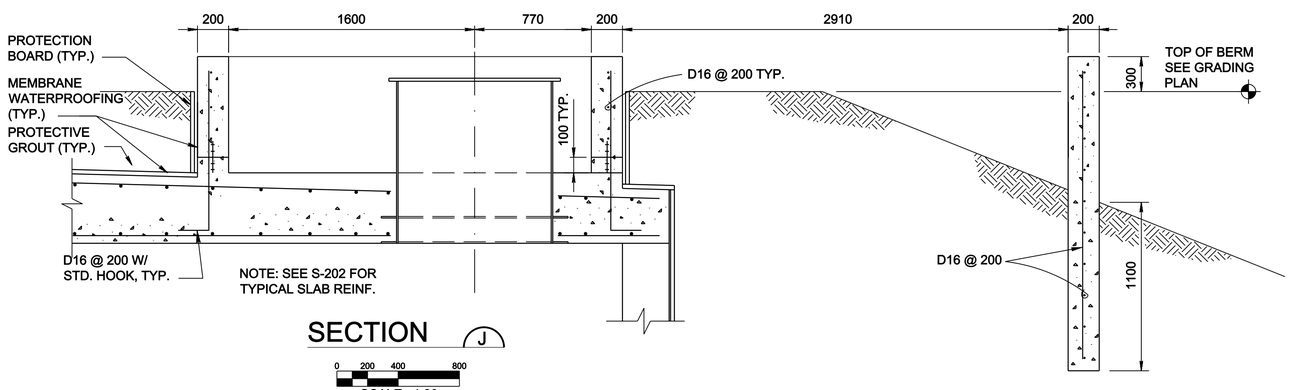

SECTION J

SCALE: 1:20

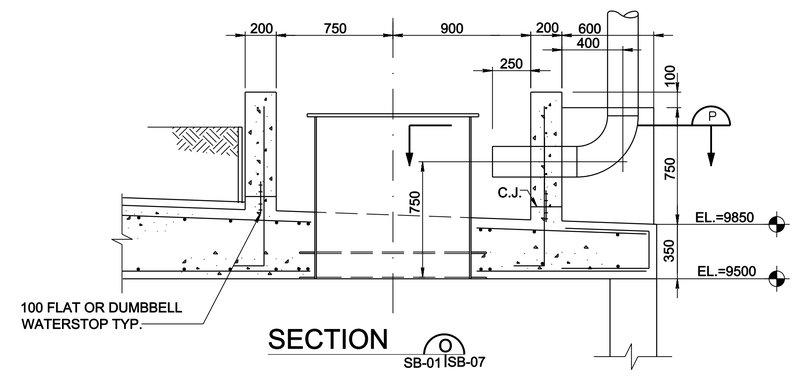

SECTION O SB-01 | SB-07

SCALE: 1:20

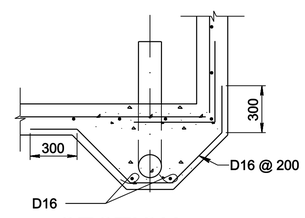

SECTION P

SCALE: 1:20

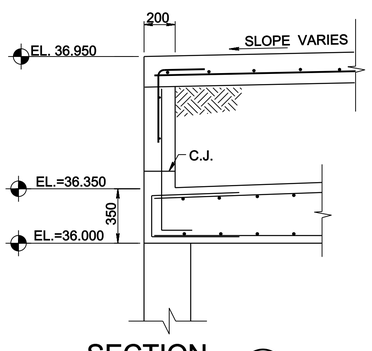

SECTION L S-101 S-102 | S-306

SCALE: 1:20

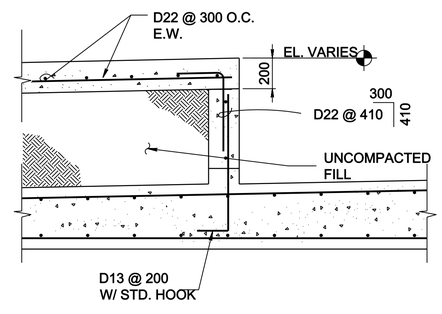

SECTION M S-101 S-102 | S-306

SCALE: 1:20

DESIGNER NOTES:

1. ROLLING COVER DETAILS ARE NOT SHOWN. COVERS ARE PART OF THE DOD PRESSURIZED HYDRANT FUELING SYSTEM TYPE III STANDARDS.
2. MODIFY END OF ROLLING COVER DETAILS TO ALLOW FOR VERTICAL ADJUSTMENT IN CASE OF SETTLEMENT.

US ARMY CORPS OF ENGINEERS
OMAHA DISTRICT

MARK	DESCRIPTION	DATE	APPR.

MARK	DESCRIPTION	DATE	APPR.

U. S. ARMY ENGINEER DISTRICT
CORPS OF ENGINEERS
OMAHA DISTRICT

DESIGNED BY: W.R.B. | DATE: JULY 2010
DWN BY: W.R.B. | CKD BY: B.M.H. | SOLICITATION NO.: Y
SUBMITTED BY: B.M.H. | CONTRACT NO.: Y
FILE NAME: auto_short_design | FILE NUMBER: X
SIZE: 841x259 | PLOT SCALE: auto_scale | PLOT DATE: auto_sytime

DOD, CUT'N'COVER STANDARDS
STORAGE TANK/PUMPHOUSE

TANK SECTIONS AND DETAILS

SHEET IDENTIFICATION NUMBER
S-306

auto_username auto_design

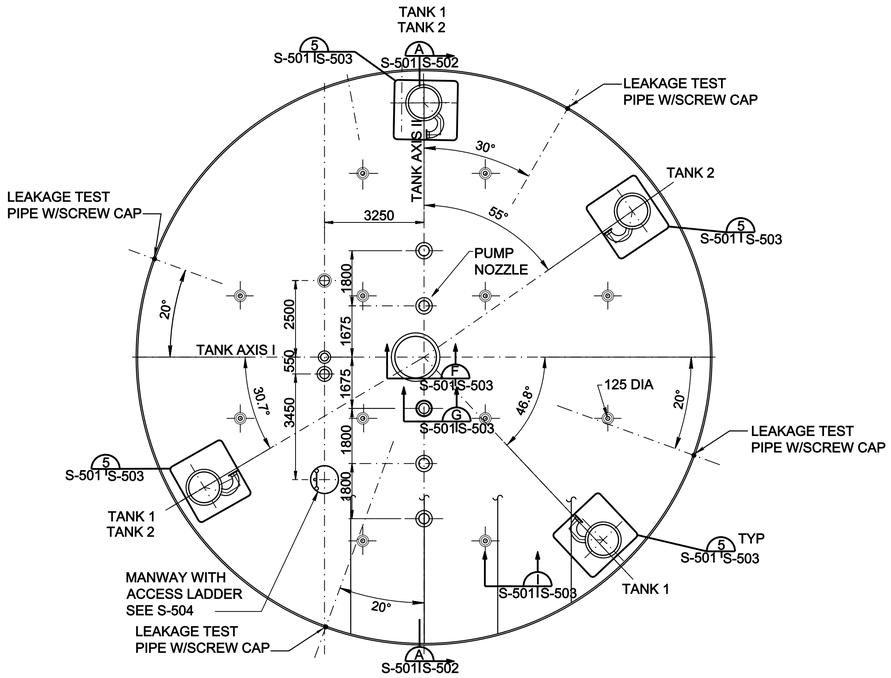

STEEL TANK ROOF PLAN

0 1000 2000 4000
SCALE: 1:100

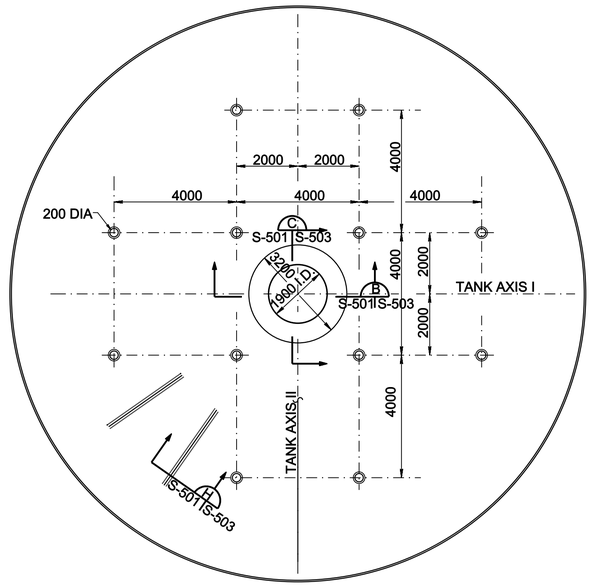

STEEL TANK FLOOR PLAN

0 1000 2000 4000
SCALE: 1:100

NOTES:

1. LAYOUT OF BOTTOM PLATES AND SEQUENCE OF WELDING SHALL BE DETERMINED BY THE CONTRACTOR TO MINIMIZE DISTORTION OF PLATES. RADIAL JOINTS IN FLOOR PLATES SHALL BE LOCATED TO AVOID INTERFENCE WITH RADIAL GUTTERS IN CONCRETE SLAB. SEE SHEET S-201 FOR GUTTER LOCATIONS.
2. INTERIOR SURFACES SHALL BE UNIFORM AND SMOOTH AS PER API 650 FOR COATING. ALL SURFACES AND FULL PENETRATION WELDS WITHIN THE TANK MUST BE GROUND TO A SMOOTH RADIUS OF AT LEAST 3mm.
3. PROVIDE FULL BEARING AT COLUMN LOCATIONS. INSPECT AND ADJUST AS NECESSARY TO ENSURE FLOOR PLATE IS IN FULL CONTACT WITH GROUT.
4. FOR SHORING STEEL ROOF PLATES SEE GENERAL NOTES SHEET S-101.

US ARMY CORPS
OF ENGINEERS
OMAHA DISTRICT

MARK	DESCRIPTION	DATE	APPR.

MARK	DESCRIPTION	DATE	APPR.

U. S. ARMY ENGINEER DISTRICT
CORPS OF ENGINEERS
OMAHA DISTRICT

DESIGNED BY: W.R.B.
DWN BY: W.R.B.
CKD BY: B.N.H.
SUBMITTED BY: B.N.H.
DATE: JULY 2010
SOLICITATION NO.: Y
CONTRACT NO.: Y
FILE NAME: auto_shor1_design
FILE NUMBER: X
SIZE: 841x559
PLOT SCALE: auto_scale
PLOT DATE: auto_sytime

DOD, CUTN'COVER STANDARDS
STORAGE TANK/PUMPHOUSE

STEEL TANK FLOOR
AND ROOF PLAN

SHEET
IDENTIFICATION
NUMBER
S-501

auto_usernome auto_design

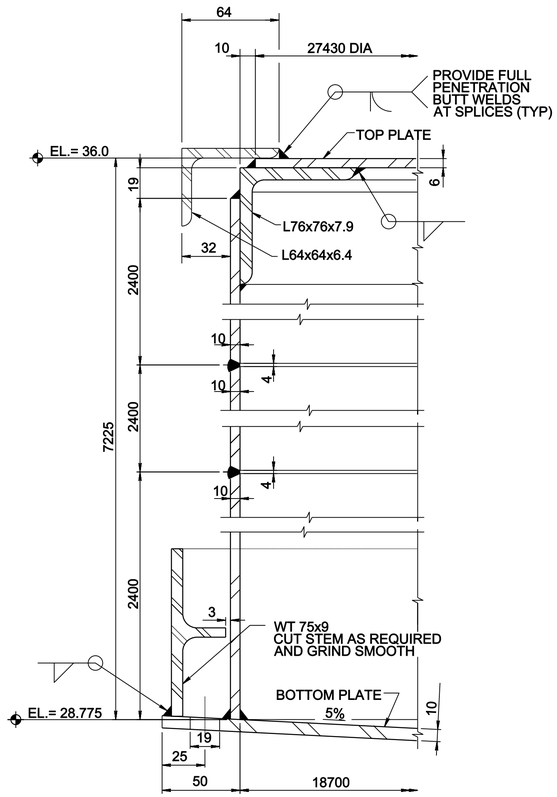

NOTES:
1. SHELL THICKNESS INCLUDES CORROSION ALLOWANCE AS SHOWN ON SHEET S-101
2. PROVIDE 19 DIA HOLE AT LOCATION OF RADIAL GUTTER DRAINS SHEET S-201

DETAIL 1

0 20 40 80
SCALE: 1:2

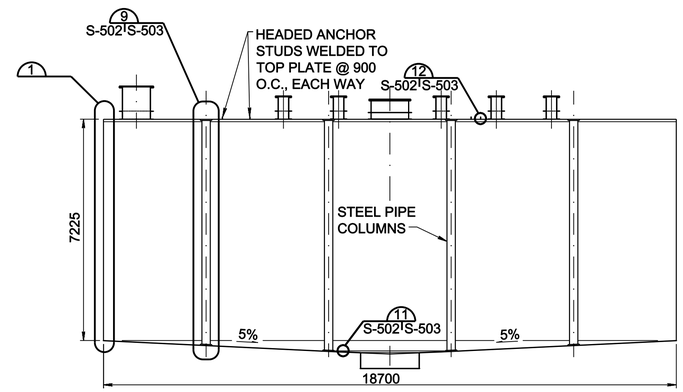

SECTION B
S-101 S-502

0 1000 2000 4000
SCALE: 1:100

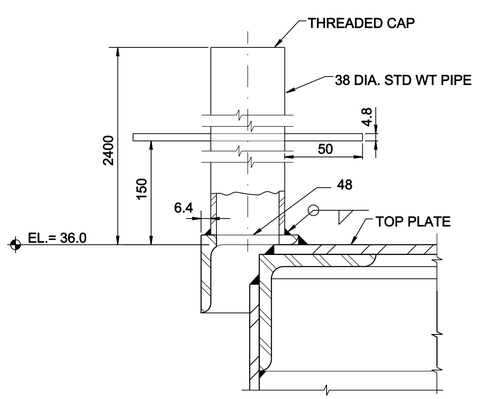

DETAIL 2
S-501 S-502

0 20 40 80
SCALE: 1:2

DESIGNER NOTES:

1. ELEVATIONS SHALL BE ADJUSTED FOR SITE SPECIFIC TERRIAN.

US ARMY CORPS OF ENGINEERS
OMAHA DISTRICT

MARK	DESCRIPTION	DATE	APPR.

MARK	DESCRIPTION	DATE	APPR.

U. S. ARMY ENGINEER DISTRICT
CORPS OF ENGINEERS
OMAHA DISTRICT

DESIGNED BY: W.R.B.
DWN BY: W.R.B.
CKD BY: B.N.H.
SUBMITTED BY: B.N.H.
FILE NAME: auto_shor1_design
SIZE: 841x559
PLOT SCALE: auto_scale
DATE: JULY 2010
SOLICITATION NO.: Y
CONTRACT NO.: Y
FILE NUMBER: X
PLOT DATE: auto_systime

DOD, CUTN'COVER STANDARDS
STORAGE TANK/PUMPHOUSE

STEEL TANK
SECTIONS AND DETAILS

SHEET IDENTIFICATION NUMBER
S-502

auto_username auto_design

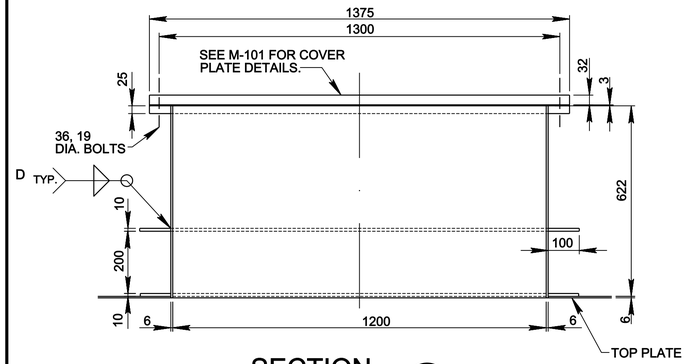

SECTION F S-501 | S-503

SCALE: 1:10

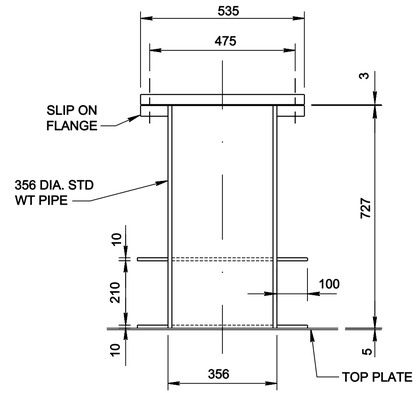

SECTION G S-501 | S-503

SCALE: 1:10

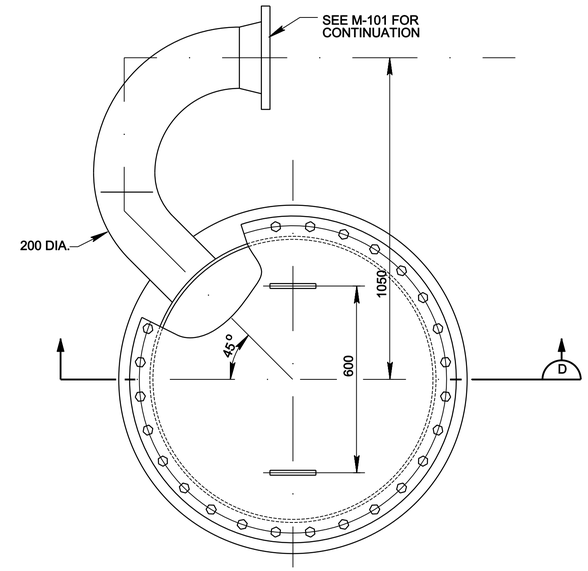

DETAIL 5 S-501 | S-503

SCALE: 1:10

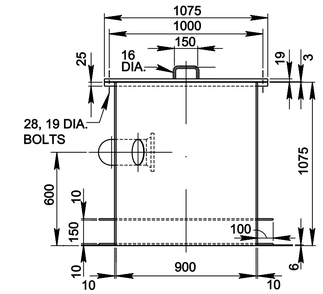

SECTION D

SCALE: 1:20

SECTION E

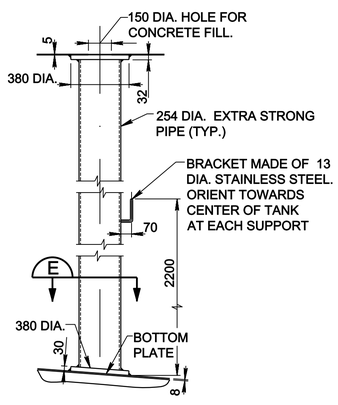

DETAIL 9 S-502 | S-503

SCALE: 1:20

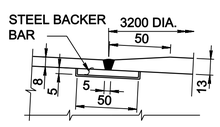

DETAIL 11 S-502 | S-503

SCALE: 1:2.5

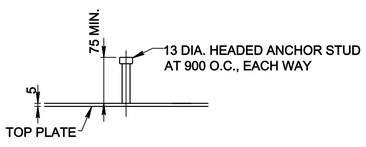

DETAIL 12 S-502 | S-503

SCALE: 1:5

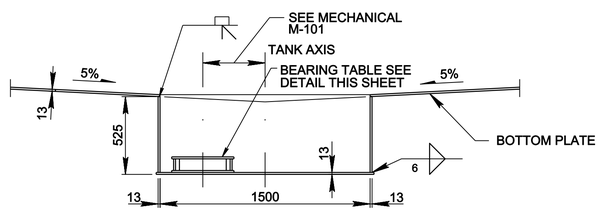

SECTION B S-501 | S-503

SCALE: 1:20

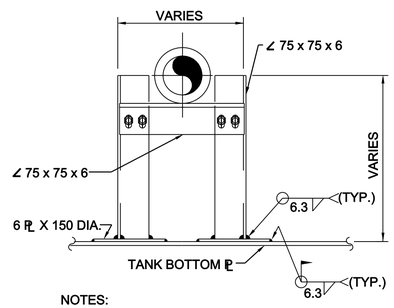

NOTES:
1. FILL PIPING. SEE MECHANICAL.
2. ASSEMBLE PIPE SUPPORTS WITH SLOTTED BOLT HOLES AND ASTM A193 STAINLESS STEEL NUTS AND BOLTS.
3. SPACE SUPPORT AT 2450 O.C. MAX.

PIPE SUPPORT

NO SCALE

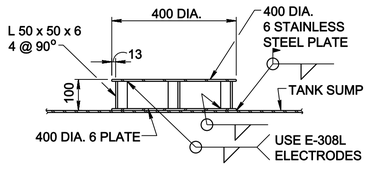

NOTE: BEARING TABLE TO BE LOCATED BENEATH GAUGE HATCH & PIPE. SEE MECHANICAL.

BEARING TABLE

SCALE: 1:10

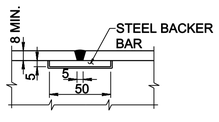

SECTION H S-501 | S-503

SCALE: 1:2.5

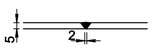

SECTION I S-501 | S-503

SCALE: 1:2.5

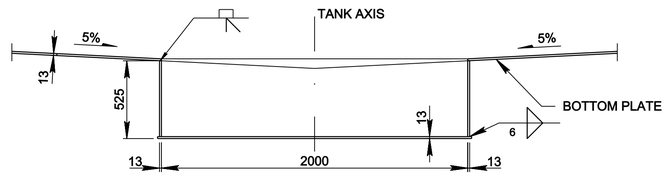

SECTION C S-501 | S-503

SCALE: 1:20

US ARMY CORPS OF ENGINEERS
OMAHA DISTRICT

MARK	DESCRIPTION	DATE	APPR.

MARK	DESCRIPTION	DATE	APPR.

U. S. ARMY ENGINEER DISTRICT
CORPS OF ENGINEERS
OMAHA DISTRICT

DESIGNED BY: W.R.B. | DWN BY: W.R.B. | CKD BY: B.N.H. | SUBMITTED BY: B.N.H. | FILE NAME: auto_short_design | FILE NUMBER: X | SOLICITATION NO.: Y | CONTRACT NO.: Y | DATE: JULY 2010 | SIZE: 841x259 | PLOT SCALE: auto_scale | PLOT DATE: auto_sytime

DOD, CUT'N'COVER STANDARDS
STORAGE TANK/PUMPHOUSE

STEEL TANK
SECTIONS AND DETAILS

SHEET IDENTIFICATION NUMBER
S-503

auto_username auto_design

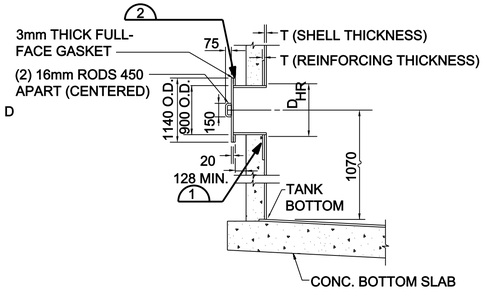

MANHOLE DETAIL

N.T.S.

NOTES:
1. THICKNESS OF SHELL & REINFORCING PLATE, "T", SHALL BE THE SAME.
2. SEE TABLE 2 ON THIS SHEET FOR DIMENSIONS.

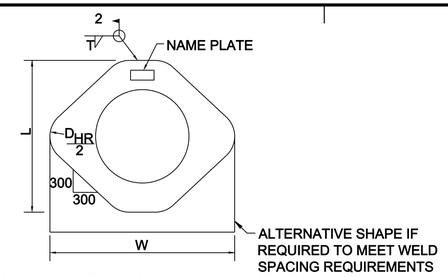

SHELL MANHOLE DETAIL (1)

N.T.S.

NOTES:
1. SEE TABLE 2 ON THIS SHEET FOR SHELL MANHOLES DIMENSIONS.

TABLE 2				
SHELL MANHOLE DIMENSIONS				
TANK SIZE (m^3)	T	L_{HR}	W_{HR}	D_{HR}
1590	8	1850	2235	920

NOTES:
1. R DIMENSIONS ARE APPROXIMATE
2. TANK BOTTOM (FOR SHELL HEIGHT DIMENSIONS) IS THE TOP ELEVATION OF BOTTOM PLATE AT SHELL-TO-BOTTOM JOINT.

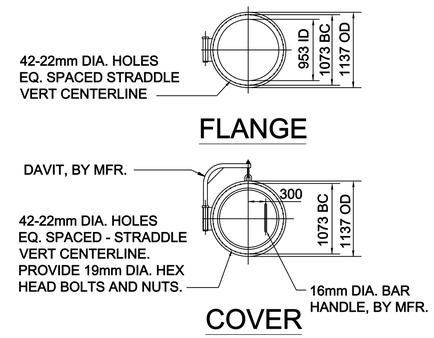

MANHOLE (2)

N.T.S.

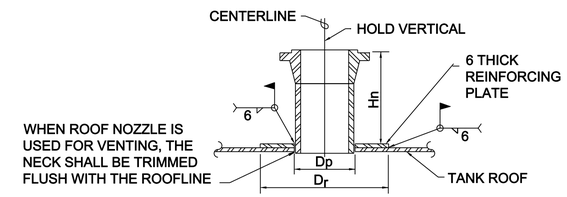

TYPICAL ROOF PENETRATION

N.T.S.

TABLE 3				
ROOF NOZZLE DIMENSIONS				
SIZE LINE	O.D. OF PIPE	CUTOUT D_p	MIN. HEIGHT H_n (*)	D_R
38	48	50	150	125
50	60	63	150	175
75	89	92	150	225
100	114	117	150	275
150	168	171	150	375
200	219	225	150	450
250	273	279	200	550
300	324	330	200	600
650	670	686	300	950

(*) INCREASE Hn BY THICKNESS OF CONCRETE ROOF SLAB

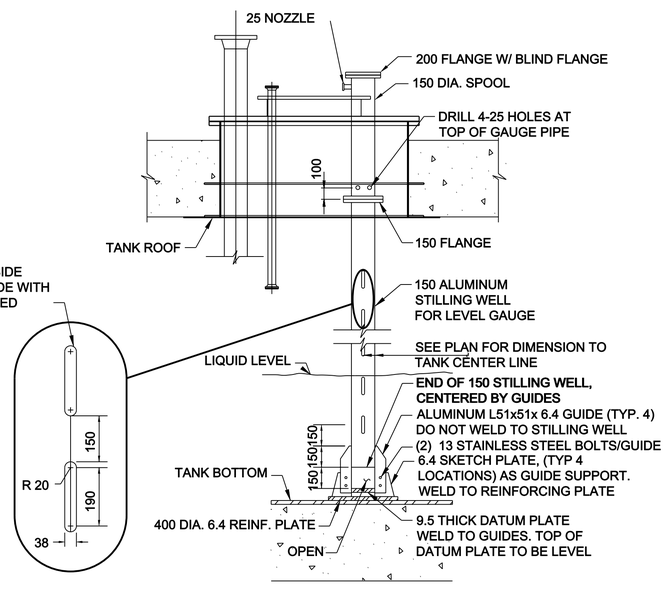

AUTOMATIC TANK LEVEL GAUGE

N.T.S.

NOTES:
1. ELEVATION OF DATUM PLATE TO MATCH DATUM PLATE FOR GAGE WELL AT ACCESS LADDER, SEE DETAIL 1. FIELD VERIFY AND ADJUST AS NECESSARY.

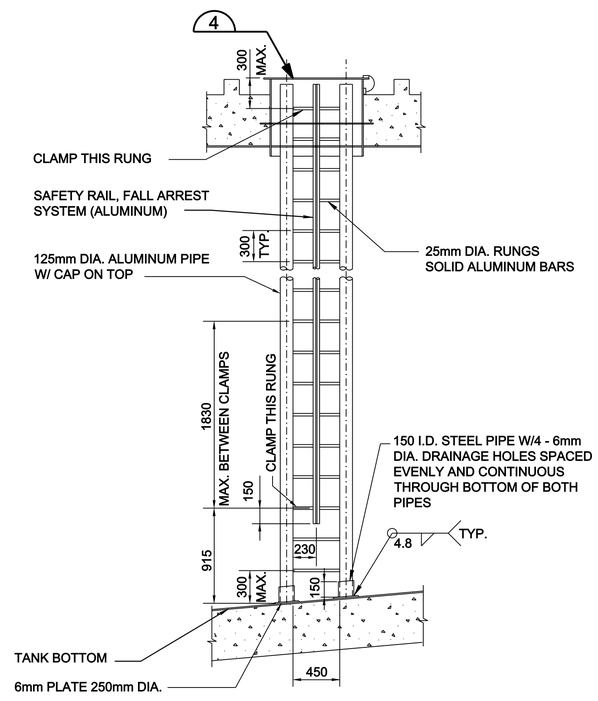

ACCESS LADDER DETAIL

N.T.S.

NOTES:
1. PROVIDE AN OPERABLE SAFETY POST THAT EXTENDS 1150mm ABOVE TOP OF MANWAY IN OPEN POSITION. SAFETY POST SHALL BE A MINIMUM OF 50mm BELOW TOP OF MANYWAY IN CLOSED POSITION.

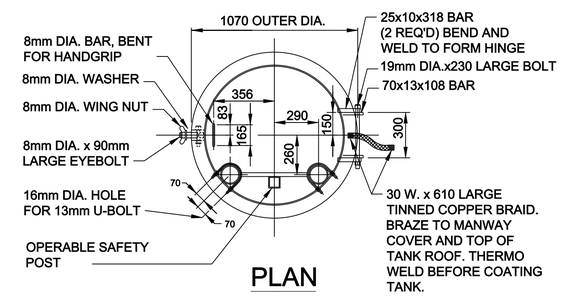

PLAN

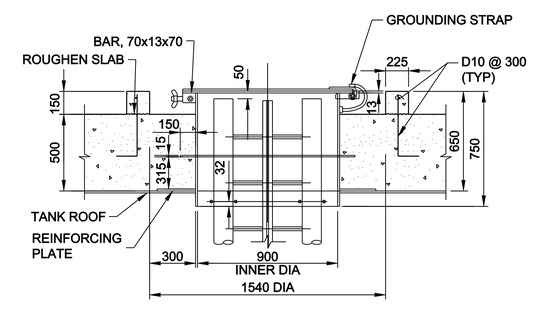

SECTION ROOF MANWAY (4)

N.T.S.

US ARMY CORPS OF ENGINEERS
OMAHA DISTRICT

MARK	DESCRIPTION	DATE	APPR.

MARK	DESCRIPTION	DATE	APPR.

U. S. ARMY ENGINEER DISTRICT
CORPS OF ENGINEERS
OMAHA DISTRICT

DESIGNED BY: W.R.B. | DWN BY: W.R.B. | CKD BY: B.M.H. | SUBMITTED BY: B.M.H. | FILE NAME: auto_short_design | SIZE: 841x559 | PLOT SCALE: auto_scale | PLOT DATE: auto_sytime | DATE: JULY 2010 | SOLICITATION NO.: X | CONTRACT NO.: X | FILE NUMBER: X

DOD, CUT/COVER STANDARDS
STORAGE TANK/PUMPHOUSE

STEEL TANK SECTIONS & DETAILS

SHEET IDENTIFICATION NUMBER
S-504

auto_username auto_design

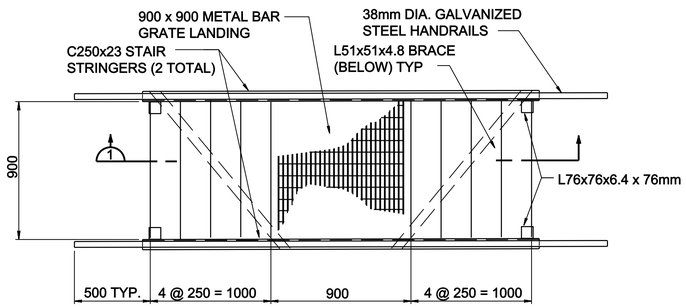

PLAN

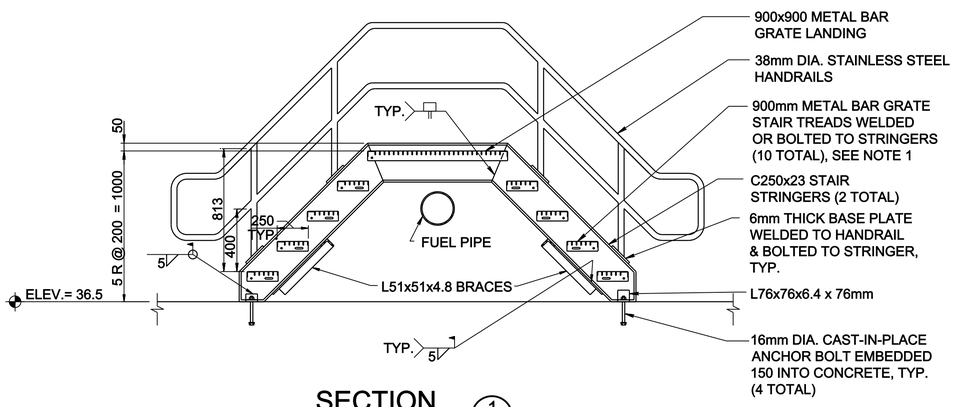

SECTION 1

S-103 | S-601
S-104

TYPICAL PIPE STAIR DETAILS

0 200 400 800
SCALE: 1:20

NOTES:

1. METAL GRATING FOR LANDINGS AND STAIR TREADS SHALL BE WELDED STEEL WITH BEARING BARS SPACED AT 30mm AND CROSS BARS SPACED AT 100mm. BEARING BAR SIZE SHALL BE 25.4mm x 5mm. TREADS AND LANDINGS SHALL HAVE CHECKERED PLATE NOSINGS. TREADS SHALL BE FABRICATED WITH CARRIER PLATES AT ENDS.
2. ALL GRATINGS, STRINGERS, ANGLES, PLATES AND BOLTS FOR STAIRS SHALL BE GALVANIZED.
3. HANDRAILS SHALL BE STAINLESS STEEL.

DESIGNER NOTES:

1. ELEVATIONS SHALL BE ADJUSTED FOR SITE SPECIFIC TERRIAN.

US ARMY CORPS OF ENGINEERS
OMAHA DISTRICT

MARK	DESCRIPTION	DATE	APPR.

MARK	DESCRIPTION	DATE	APPR.

U. S. ARMY ENGINEER DISTRICT
CORPS OF ENGINEERS
OMAHA DISTRICT

DESIGNED BY: W.R.B.
DWN BY: W.R.B.
CKD BY: B.M.H.
SUBMITTED BY: B.M.H.
DATE: JULY 2010
SOLICITATION NO.: T
CONTRACT NO.: Y
FILE NAME: auto_shortL_design
FILE NUMBER: X
PLOT SCALE: auto_scale
PLOT DATE: auto_sytime
SIZE: 841x559

DOD, CUT'N'COVER STANDARDS
STORAGE TANK/PUMPHOUSE

METAL STAIRS

SHEET IDENTIFICATION NUMBER
S-601

auto_usernome auto_design