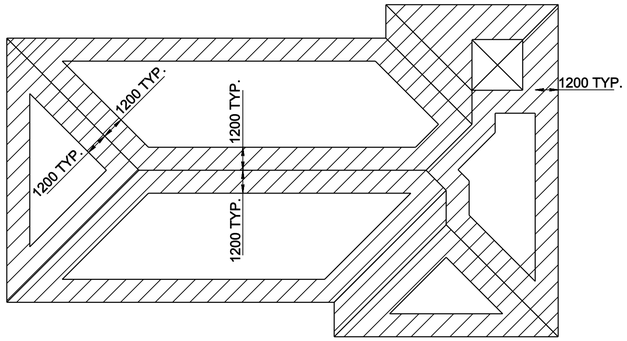

DESIGN WIND UPLIFT PRESSURES RETROFIT ROOF SYSTEM

NO SCALE

LEGEND

AREA	UPLIFT PRESSURE
	1.82 kPa
	2.78 kPa

NOTE:
SNOW DRIFT LOADING SHALL BE APPLIED TO RETROFIT ROOF AT PENTHOUSE

DESIGNER NOTES:

1. SEIMIC LOADING IS SITE SPECIFIC. BUILDING DESIGN IS TO BE MODIFIED ACCORDINGLY.
2. THE SNOW, WIND AND ROOF LOADING SHALL BE CHECKED AGAINST LOCAL CONDITIONS AND THE BUILDING DESIGN SHALL BE MODIFIED.
3. FROST DEPTH AND FOOTING SIZES SHALL BE BASED ON SITE CONIDITIONS.
4. THE BUILDING HAS NOT BEEN DESIGNED FOR BLAST LOADINGS AND SHALL BE ANALYZED PER SPECIFIC THREAT REQUIREMENTS.
5. ORIENTATION OF NORTH ARROW WILL NEED ADJUSTED BASED ON LOCATION.
6. PRECAST PANELS SHALL BE PERFORMANCE DESIGN IN PRECAST CONCRETE SPECIFICATION TO LOCAL LOADING CONDITIONS.

GENERAL NOTES:
1. REFERENCE ELEVATION 10 000 = X.X MEAN SEA LEVEL ELEVATION.
2. COORDINATION:
   A. THE CONTRACTOR SHALL VERIFY ALL DIMENSIONS BEFORE STARTING WORK AND THE CONTRACTING OFFICER SHALL BE NOTIFIED IMMEDIATELY OF ANY DISCREPANCY.
   B. CONTRACTOR SHALL PROVIDE AND MAINTAIN ADEQUATE BRACING AND SHORING AT ALL TIMES DURING CONSTRUCTION.
   C. STRUCTURAL DRAWINGS SHALL BE COORDINATED WITH ARCHITECTURAL, MECHANICAL, AND ELECTRICAL DRAWINGS FOR ADDITIONAL OPENINGS, SLEEVES, ETC. NOT SHOWN ON STRUCTURAL DRAWINGS. COORDINATE LOCATION, SIZE, AND REINFORCING OF ALL OPENINGS WITH RESPECTIVE TRADES BEFORE FABRICATION.
3. ALL DIMENSIONS ARE MILLIMETERS UNLESS NOTED OTHERWISE.

DESIGN NOTES:
1. SNOW LOADS (UFC 3-310-01 AND ASCE 7-05)
   A. GROUND SNOW LOAD — Pf=1.44 kPa
   B. EXPOSURE FACTOR — Ce=1.0
   C. THERMAL FACTOR — Ct=1.1
   D. IMPORTANCE FACTOR — I=1.2
   E. UNIFORM ROOF SNOW LOAD — Ps=1.44 kPa
2. WIND LOADS (UFC 3-310-01 AND ASCE 7-05)
   A. BASIC WIND SPEED — V=40 m/s (3 SECOND GUST)
   B. IMPORTANCE FACTOR — I=1.15
   C. EXPOSURE FACTOR — C
   D. CATEGORY — III
3. SEISMIC LOADS (TM 5-809-10)
   A. SEISMIC USE GROUP III
   B. Ss = 0.30
   C. S1 =0.13
   D. SITE CLASSIFICATION "D"
   E. SEISMIC DESIGN CATEGORY "D"
4. ROOF LIVE LOADS
   A. CONSTRUCTION & MAINTENANCE 0.95 kPa

SOILS & FOUNDATION DATA
1. DESIGN FOUNDATION DEPTH (BELOW FINISHED GRADE) = 900

MATERIAL NOTES
CONCRETE AND REINFORCEMENT: (SHALL CONFORM TO ACI 318-05)
1. SPECIFIED COMPRESSIVE STRENGTH, f'c = 28.0 MPa PSI AT 28 DAYS TYP.
2. REINFORCING STEEL: SPECIFIED YIELD STRENGTH, Fy = 420 MPa (GRADE 420).
3. LAP SPLICES AND CONCRETE COVER OF REINFORCEMENT SHALL CONFORM TO ACI 318-05 USING CLASS B TENSION SPLICES UNLESS OTHERWISE NOTED. SEE TABLE, THIS SHEET.
4. WELDED WIRE FABRIC (LOCATED 40 BELOW TOP OF CONCRETE SLAB) SHALL CONFORM TO ASTM A-497.
5. ALL FLOOR JOINTS IN THE FILTER ROOM AREA SHALL BE SEALED WITH SINGLE COMPONENT SILICON JOINT SEALANT.
6. SEE SHEET S-201 FOR TYPICAL REINFORCING AT OPENINGS IN ROOF AND WALLS.
7. CLEAR COVER FOR CAST-IN-PLACE CONCRETE REINFORCEMENT U.N.O. SHALL BE AS FOLLOWS:
   A) CONCRETE CAST AGAINST & PERMANENTLY EXPOSED TO EARTH = 75
   B) FORMED SURFACES OF CONCRETE EXPOSED TO EARTH OR WEATHER:
      ≤ D16 BAR = 40
      ≥ D18 BAR = 50
   C) CONCRETE NOT EXPOSED TO EARTH OR WEATHER = 19

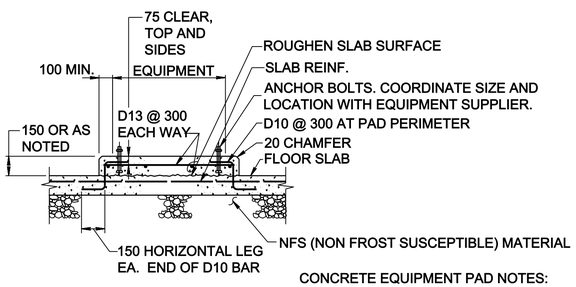

SECTION 1 S-101 | S-100

0 200 400 600 800 MM
SCALE: 1 : 20

CONCRETE EQUIPMENT PAD NOTES:

1. SEE MECHANICAL AND ELECTRICAL SHEETS FOR ADDITIONAL INFORMATION.
2. THE PLAN DIMENSONS OF EQUIPMENT BASES AND THEIR ANCHOR BOLT LOCATIONS, SIZES, EMBEDMENTS, AND PROJECTIONS SHALL SUIT THE REQUIREMENTS OF THE APPROVED EQUIPMENT FURNISHED.

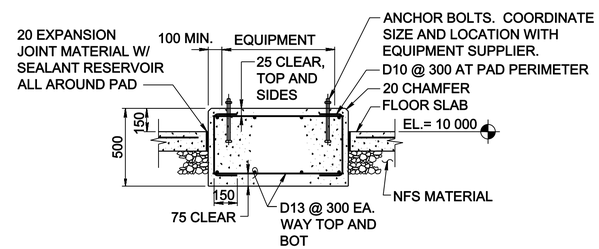

SECTION 2 S-101 | S-100

0 200 400 800
SCALE: 1:20

LAP SPLICE LENGTH (mm)		
BAR SIZE NO.	TOP BAR	OTHER
D10	620	480
D13	830	640
D16	1030	790
D19	1240	950
D22	1440	1110

TABLE NOTES:
1. LAP SPLICE LENGTH FOR REINFORCED CONCRETE.
2. MINIMUM UNLESS NOTED OTHERWISE.
3. NOT ALL BAR SIZES ARE INCLUDED IN PROJECT.
4. TOP BARS ARE HORIZONTAL BARS SO PLACED THAT MORE THAN 300mm OF FRESH CONCRETE IS CAST IN THE MEMBER BELOW THE SPLICE

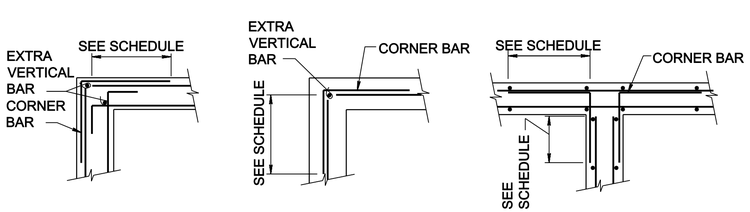

TYPICAL LAP BAR DETAIL FOR HORIZONTAL CONCRETE REINFORCEMENT

NO SCALE

NOTE:
1. DETAILS APPLY TO FOOTINGS & FOUNDATION WALLS.
2. CORNER BARS TO MATCH SIZE & SPACING OF HORIZONTAL BARS.

STRUCTURAL STEEL: SHALL CONFORM TO AISC SPECIFICATIONS FOR STRUCTURAL STEEL BUILDINGS.
1. ROLLED PLATES AND SHAPES SHALL CONFORM TO ASTM A36M, Fy = 250 MPa.
2. STRUCTURAL TUBING SHALL CONFORM TO ASTM A500, GRADE B, Fy = 290 MPa.
3. HIGH STRENGTH BOLTS SHALL BE ASTM A325-N (U.N.O.) , 19 DIA. U.N.O.
4. WELDED STEEL ANCHOR STUDS SHALL CONFORM TO ASTM A108.
5. ANCHOR BOLTS AND OTHER UNFINISHED BOLTS SHALL CONFORM TO ASTM A-307.
6. EXPANSION BOLTS SHALL CONFORM TO CID 1923A TYPE 4. SIZE AS NOTED ON DRAWINGS.
7. WELDING ELECTRODES SHALL CONFORM TO E70XX.
8. WELDING SHALL CONFORM TO AWS D1.1
9. UNLESS NOTED OTHERWISE (U.N.O.) MINIMUM BOLT SPACING SHALL BE 75, MINIMUM EDGE DISTANCE SHALL BE 40.

PRECAST CONCRETE PANELS: (SHALL CONFORM TO ACI 318-02).
1. MINIMUM COMPRESSIVE STRENGTH f'c = 34.5 MPa. AT 28 DAYS TYP.
2. PANELS AND CONNECTIONS TO STRUCTURE SHALL BE ABLE TO WITHSTAND A UNIFORM LATERAL LOAD OF 2.39 kPa.
3. PRECAST PANEL CONNECTIONS SHALL BE ABLE TO ACCOMENDATE DIFFERENTIAL MOVEMENT OF 19mm BETWEEN PRECAST PANEL SUPPORTING STRUCTURE.

PRECAST CONCRETE PILES: (SHALL CONFORM TO ACI 318-05).
1. MINIMUM COMPRESSIVE STRENGTH f'c = 34.5 MPa. AT 28 DAYS TYP.
2. PRESTRESSING STRANDS (LOW-RELAXATION STRAND): SPECIFIED TENSILE STRENGTH OF PRESTRESSING STEEL, fpu = 1860 MPa
3. REINFORCING STEEL: SPECIFIED YIELD STRENGTH, Fy = 390 MPa (GRADE 390).
4. PRECAST PILES SHALL HAVE A VERTICAL CAPACITY OF 76 TONS AND SHALL BE DRIVEN TO REFUSAL AS PER SPECIFCATIONS.
5. THE MINIMUM EMBEDMENT LENGTH OF THE PRECAST PILES SHALL BE NO LESS THAN 9 METERS BELOW THE BOTTOM CAST-IN-PLACE CAPS. SEE SPECIFICATION XX XX XX.XX FOR DETERMINING FINAL DEPTH.
6. THE TOP OF THE PRECAST PILES SHALL EXTEND 150 INTO THE CAST-IN-PLACE CAPS.

US ARMY CORPS OF ENGINEERS
OMAHA DISTRICT

MARK	DESCRIPTION	DATE	APPR.

MARK	DESCRIPTION	DATE	APPR.

U. S. ARMY ENGINEER DISTRICT
CORPS OF ENGINEERS
OMAHA, NEBRASKA

DESIGNED BY: W.R.B. | DATE: JULY 2010
DWN BY: W.R.B. | CKD BY: | SOLICITATION NO.: W912BP-00-X-00XX
SUBMITTED BY: | CONTRACT NO.: W912BP-00-C-00XX
FILE NAME: 0D40S-001.dwg | FILE NUMBER: X
SIZE: 841x559 | PLOT SCALE: 1.000 / mm | PLOT DATE: 7/21/2010

DOD, CUTN'COVER STANDARDS
FILTER BUILDING

DESIGN AND GENERAL NOTES

SHEET IDENTIFICATION NUMBER
S-001

I:\dwgs\struct\0D40S-001.dwg
g6ezxncd

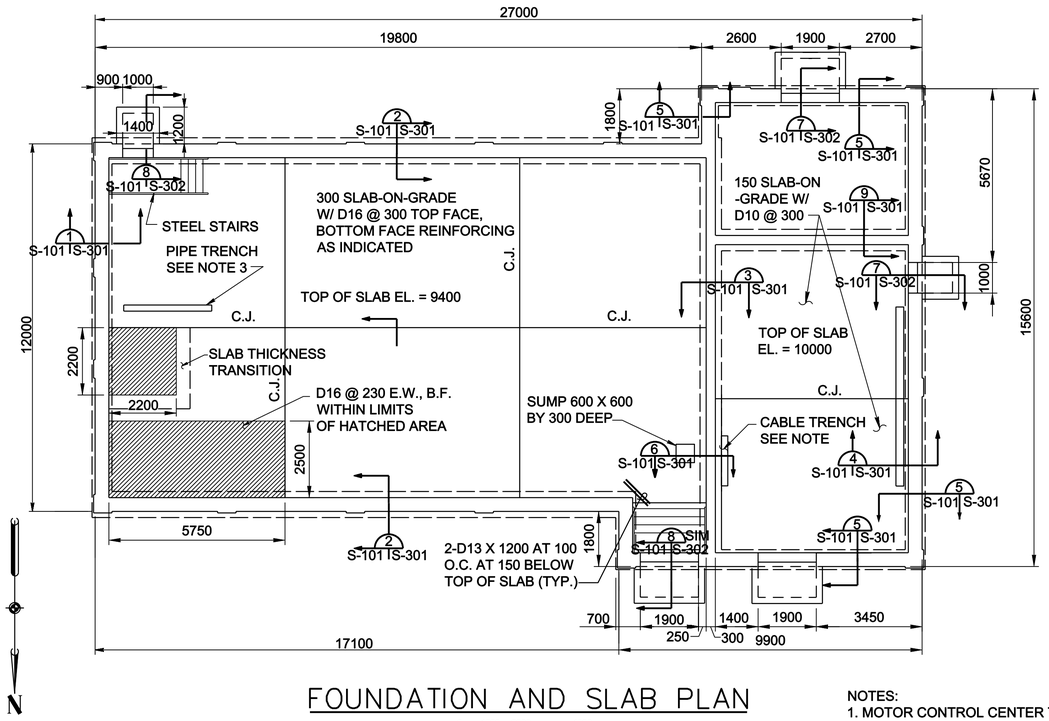

FOUNDATION AND SLAB PLAN

0 1000 2000 4000
SCALE: 1:100

NOTES:
1. MOTOR CONTROL CENTER TRENCH APPROXIMATELY 3600 LONG MAIN DISTRIBUTION SWITCH GEAR AND PUMP CONTROL PANEL TRENCHES ARE APPROXIMATELY 1650 AND 5850 LONG. COORDINATE WITH EQUIPMENT MANUFACTURER FOR EXACT LENGTH OF TRENCH.
2. COORDINATE PLACEMENT OF PIPES INCLUDING REQUIRED SLEEVES THROUGH CONCRETE SLAB WITH MECHANICAL.
3. PIPE TRENCH APPROXIMATELY 2900 LONG. COORDINATE WITH MECH PIPING LAYOUT FOR EXACT LOCATION AND LENGTH OF TRENCH. SEE SHEET S-305 FOR PIPE TRENCH DETAIL.

DESIGNER NOTES:

1. STEEL STAIR SHALL BE PERFORMANCED SPECIFIED IN MISCELLANEOUS METALS SPECIFICATION.

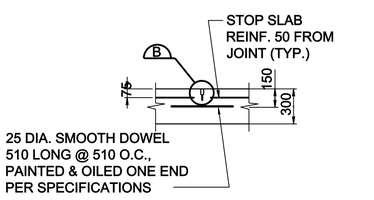

CONTRACTION JOINT 300 SLAB

NO SCALE

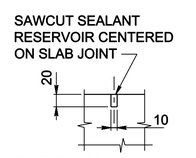

DETAIL A

N.T.S.

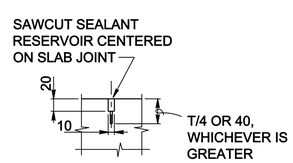

DETAIL B

N.T.S.

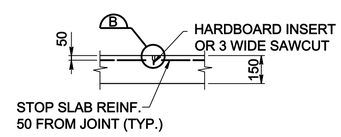

CONTRACTION JOINT 150 SLAB

N.T.S.

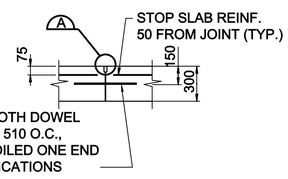

DOWELED CONSTRUCTION JOINT 300 SLAB

NO SCALE

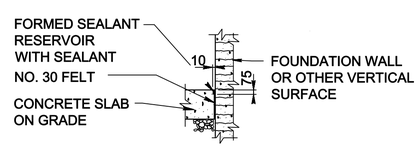

SLAB ON GRADE AT VERTICAL SURFACE DETAIL

N.T.S.

B.F. BOTTOM FACE
E.W. EACH WAY

C.J. CONTRACTION JOINT
E.J. EXPANSION JOINT

AT CONTRACTORS OPTION CONSTRUCTION JOINT MAY BE SUBSTITUED FOR CONTRACTION JOINT

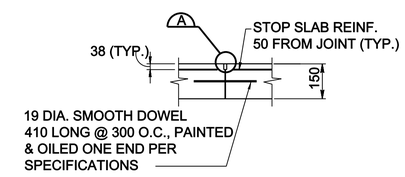

DOWELED CONSTRUCTION JOINT 150 SLAB

N.T.S.

US ARMY CORPS OF ENGINEERS
OMAHA DISTRICT

MARK	DESCRIPTION	DATE	APPR.

MARK	DESCRIPTION	DATE	APPR.

U. S. ARMY ENGINEER DISTRICT
CORPS OF ENGINEERS
OMAHA, NEBRASKA

DESIGNED BY: WRB | DATE: JULY 2010
DWN BY: WRB | CKD BY: BMH
SUBMITTED BY: BMH
SOLICITATION NO.: W912BF-0X-X-00XX
CONTRACT NO.: W912BF-0X-C-00XX
FILE NAME: 00405-101.dwg
FILE NUMBER: X
SIZE: 841x559
PLOT SCALE: 1 / mm
PLOT DATE: 7/21/2010

DOD, CUTN'COVER STANDARDS
FILTER BUILDING

FOUNDATION AND SLAB PLAN

SHEET IDENTIFICATION NUMBER
S-101

I:\dwgs\struct\00405-101.dwg
g6advnced

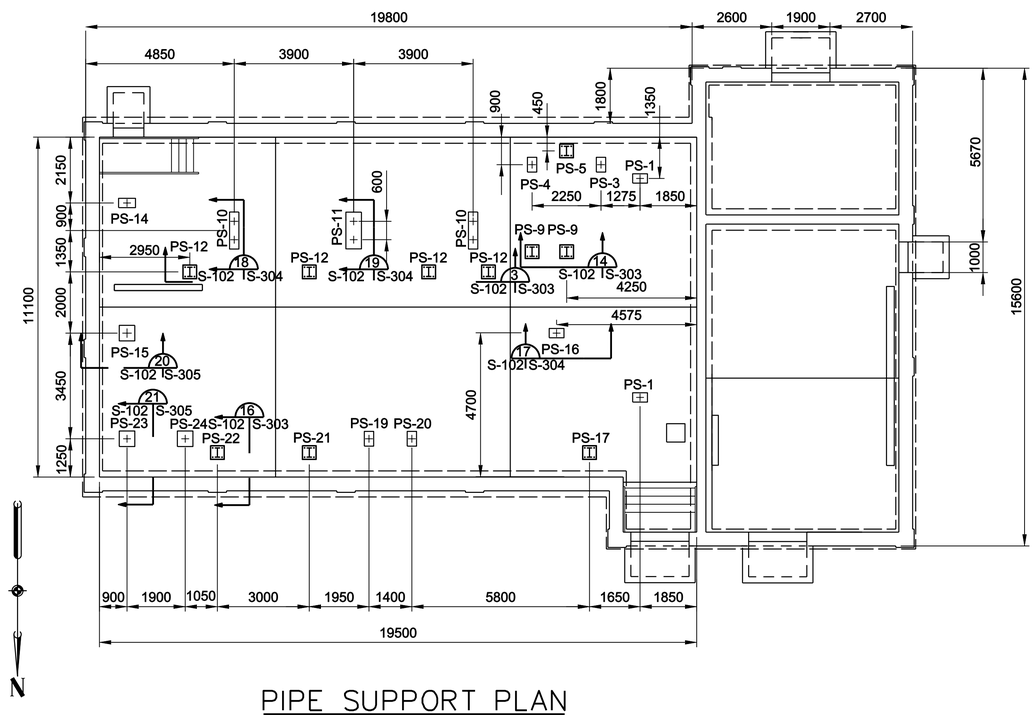

PIPE SUPPORT PLAN

0 1000 2000 4000
SCALE: 1:100

PIPE SUPPORT SCHEDULE							
PIPE SUPPORT NUMBER	PIPE DIA.	HEIGHT TO ℄ PIPE (H)	PS TYPE SEE DETAILS ON THIS SHEET	PIERS SIZE	PIERS VERT. REINF.	PIERS CLOSED TIES	REMARKS
PS-1	200	3275	A	500x300	6-D19	D10@300	SEE SECT. 17 ON S-304
PS-3	200	600	A	500x300	6-D19	D10@300	SEE SECT. 17 ON S-304
PS-4	200	600	A	500x300	6-D19	D10@300	SEE SECT. 17 ON S-304
PS-5	200	1200	B	450x450		1-D10	SEE SECT. 16 ON S-303
	200	600	B				
PS-9	200	2591	B	450x450		1-D10	SEE SECT. 14 ON S-303
PS-10	300	2591	A	1200x300	12-D19	D10@300	SEE SECT. 18 ON S-304
PS-11	300	2591	C	1200x500	24-D19	D10@300	SEE SECT. 19 ON S-304
PS-12	150	2591	B	450x450		1-D10	SEE SECT. 15 ON S-303
	150	SEE NOTE 1	B				
PS-14	250	2616	A	550x300	6-D19	D10@300	SEE SECT. 17 ON S-304
PS-15	250	2616	C	500x500	12-D19	D10@300	SEE SECT. 20 ON S-305
PS-16	200	2591	A	500x300	6-D19	D10@300	SEE SECT. 17 ON S-304
PS-17	200	3275	B	450x450		1-D10	SEE SECT. 16 ON S-303
	200	####	B				
	200	####	B				
PS-19	200	900	A	500x300	6-D19	D10@300	SEE SECT. 17 ON S-304
PS-20	200	3275	A	500x300	6-D19	D10@300	SEE SECT. 17 ON S-304
PS-21	200	1800	B	450x450		1-D10	SEE SECT. 16 ON S-303
	50	1350	B				
	150	900	B				
PS-22	200	1800	B	450x450		1-D10	SEE SECT. 16 ON S-303
	50	1350	B				
	100	900	B				
PS-23	300	900	C	500x500	12-D19	D10@300	SEE SECT. 21 ON S-305
PS-24	300	900	C	500x500	12-D19	D10@300	SEE SECT. 21 ON S-305

PIPE SUPPORT NOTES:
1. CENTERLINE HEIGHT SET BY FILTER/SEPARATOR. COORDINATE WITH FILTER/SEPARATOR MANUFACTURER.
2. PIPE SUPPORT FRAMES PS-9 and PS-12 SUPPORT MULTIPLE PIPES. SEE ELEVATION ON S-303 AND MECHANICAL SHEET M-101 FOR SUPPORT POINT LOCATIONS ON EACH FRAME.
3. "####" SEE MECHANICAL SHEET M-203.

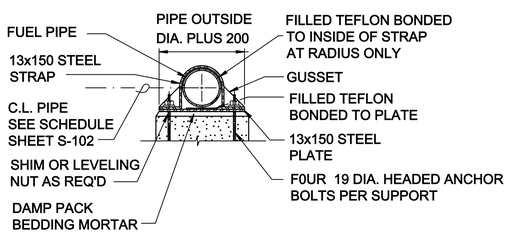

TYPE A

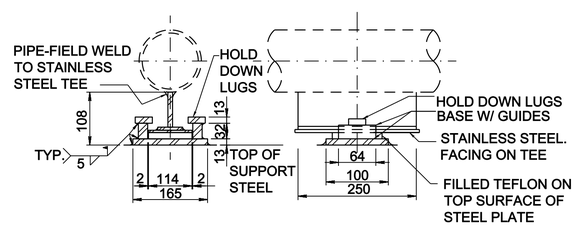

TYPE B
PIPE SUPPORT DETAILS
NO SCALE

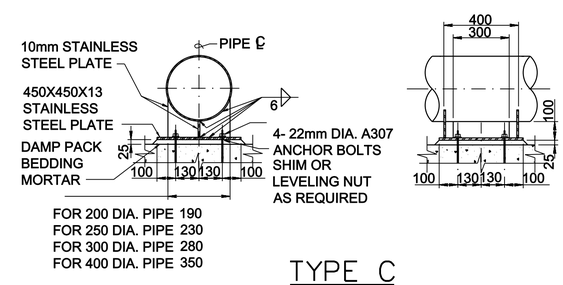

TYPE C
PIPE ANCHOR DETAIL
NO SCALE

US ARMY CORPS OF ENGINEERS
OMAHA DISTRICT

MARK	DESCRIPTION	DATE	APPR.

MARK	DESCRIPTION	DATE	APPR.

DATE: JULY 2010
SOLICITATION NO.: W912BF-10-X-00XX
CONTRACT NO.: W912BF-10-C-00XX
FILE NUMBER: X
PLOT DATE: 7/21/2010
DESIGNED BY: WRB
DWN BY: WRB
CKD BY: BMH
SUBMITTED BY: BMH
FILE NAME: OD40S-102.dwg
PLOT SCALE: 1 = / mm
SIZE: 841x559

U. S. ARMY ENGINEER DISTRICT
CORPS OF ENGINEERS
OMAHA, NEBRASKA

DOD, CUTN'COVER STANDARDS
FILTER BUILDING

PIPE SUPPORT PLAN

SHEET IDENTIFICATION NUMBER
S-102

i:\dwgs\struct\OD40S-102.dwg
g6edsncd

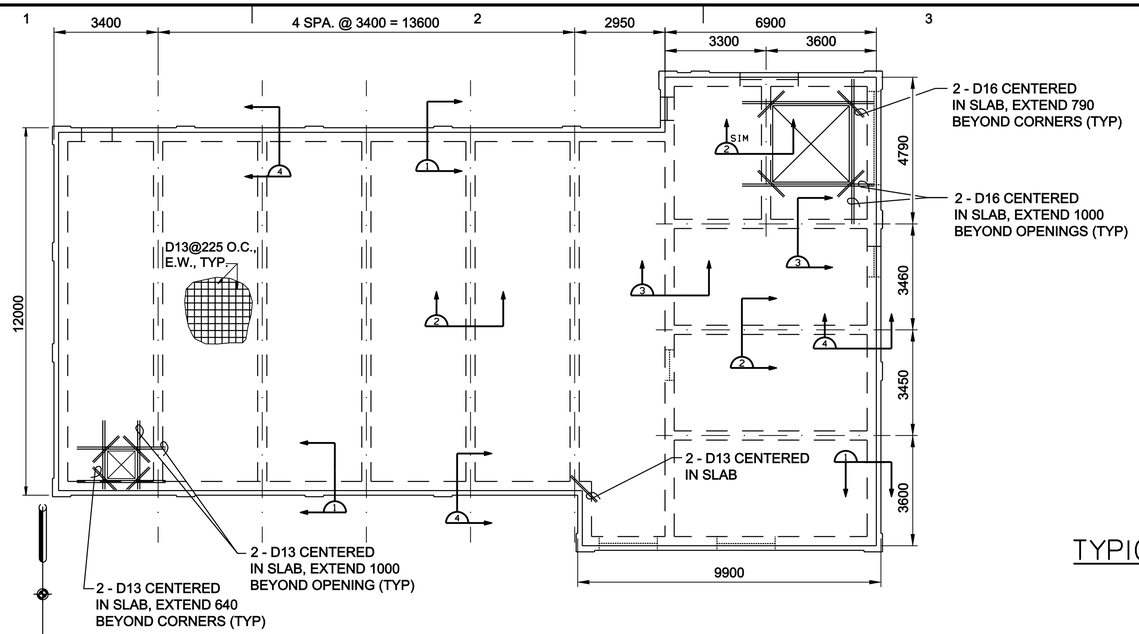

NOTES:
1. RETROFIT ROOF SYSTEM NOT SHOWN. SEE ARCH. SHEETS.

ROOF FRAMING PLAN

0 1000 2000 4000
SCALE: 1:100

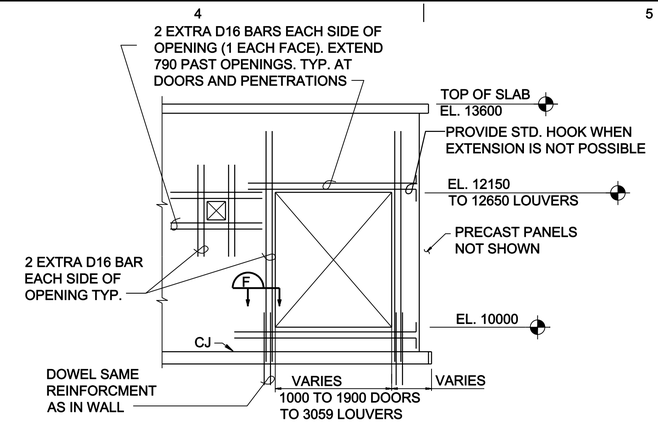

NOTES:
1. REINFORCEMENT SHOWN IS IN ADDITION TO REINF. SHOWN IN OTHER SECTIONS.
2. LINTEL REINFORCING AT MECHANICAL LOUVER SHALL CONSIST OF 2-D22 BARS EXTENDED 1110 BEYOND OPENING.
3. SEE MECHANICAL AND ARCHITECTURAL SHEETS FOR OPENING SIZES.

TYPICAL REINFORCING AT DOORS AND WALL PENETRATIONS

0 500 1000 2000
SCALE: 1:50

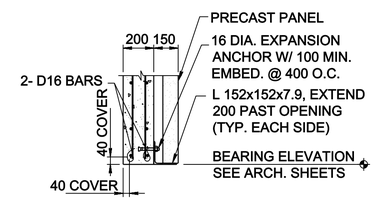

TYPICAL LINTEL

0 200 400 800
SCALE: 1:20

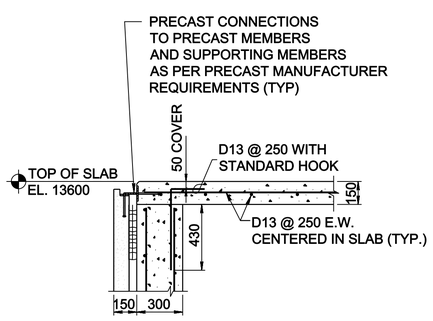

SECTION 1

0 200 400 800
SCALE: 1:20

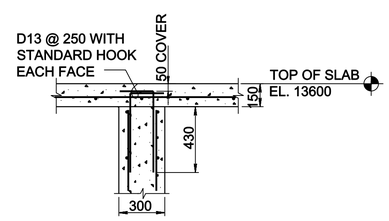

SECTION 3

0 200 400 800
SCALE: 1:20

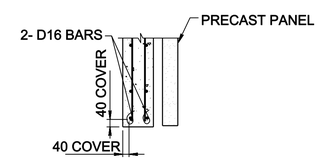

SECTION F

0 200 400 800
SCALE: 1:20

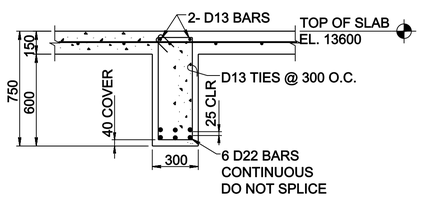

SECTION 2

0 200 400 800
SCALE: 1:20

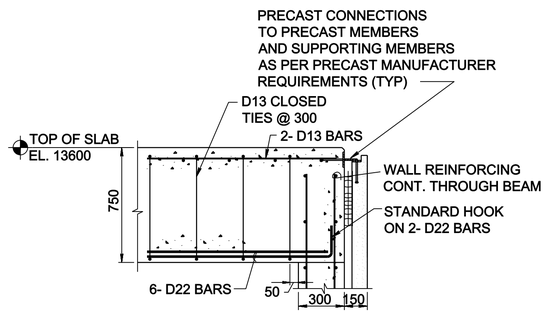

SECTION 4

0 200 400 800
SCALE: 1:20

DESIGNER NOTES:

1. ADD RETROFIT ROOF SYSTEM PERFORMANCE SPECIFICATION TO PROJECT.
2. ORIENTATION OF NORTH ARROW WILL NEED ADJUSTED BASE ON PROJECT LOCATION.
3. ELEVATIONS SHALL BE ADJUSTED FOR SITE SPECIFIC TERRAIN.

US ARMY CORPS OF ENGINEERS
OMAHA DISTRICT

MARK	DESCRIPTION	DATE	APPR.

MARK	DESCRIPTION	DATE	APPR.

DATE: JULY 2010
SOLICITATION NO.: W912BF-0X-X-0XXX
CONTRACT NO.: W912BF-0X-C-0XXX
FILE NUMBER: X
DESIGNED BY: WRB
DWN BY: WRB
CKD BY: BMH
SUBMITTED BY: SHAH
FILE NAME: OD40S-201.dwg
PLOT DATE: 7/21/2010
SIZE: 841x559
PLOT SCALE: 1 = mm

U. S. ARMY ENGINEER DISTRICT
CORPS OF ENGINEERS
OMAHA, NEBRASKA

DOD, CUT'N'COVER STANDARDS
FILTER BUILDING

ROOF FRAMING PLAN

SHEET IDENTIFICATION NUMBER
S-201

I:\dwgs\struct\OD40S-201.dwg
g6advnced

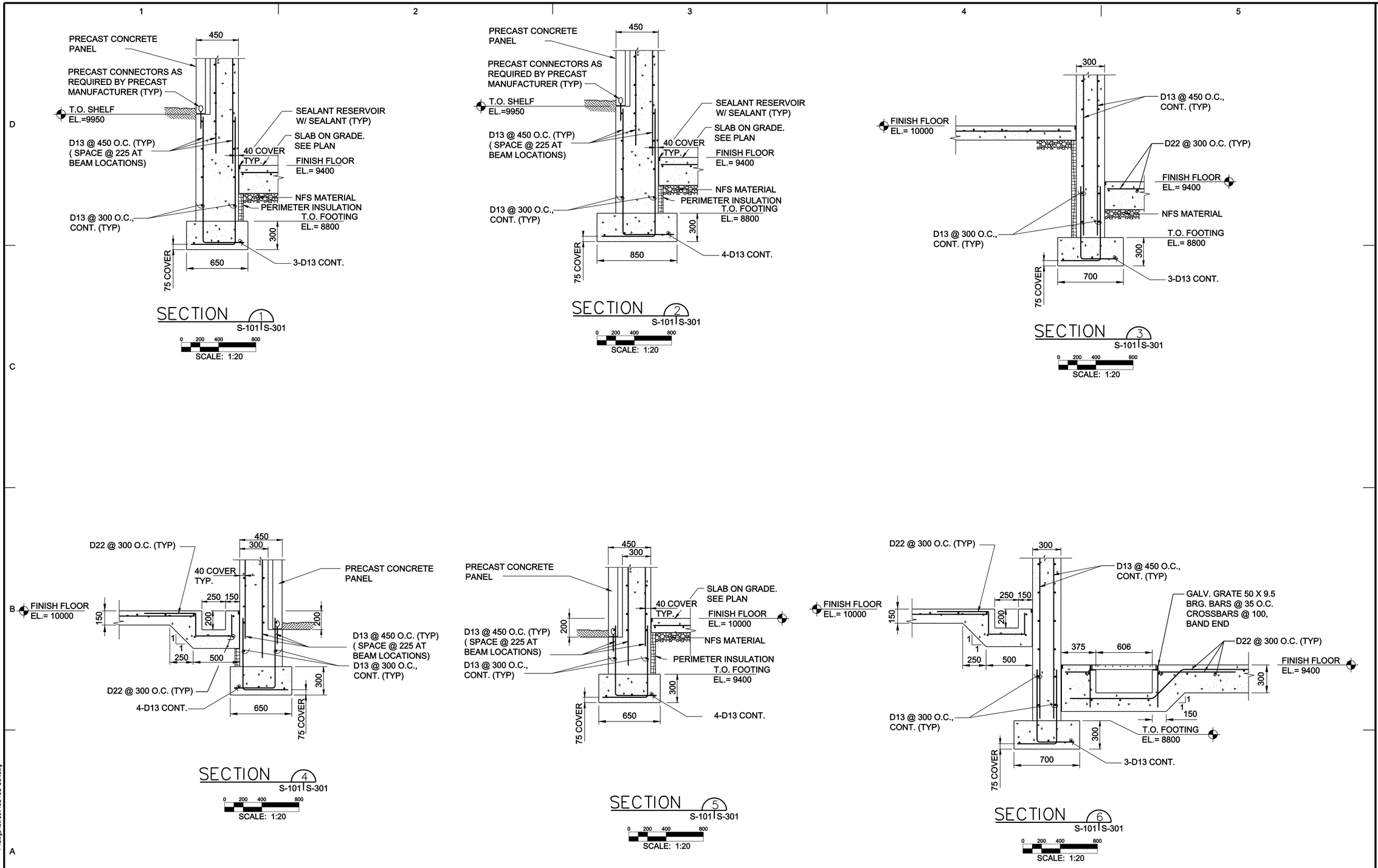

DESIGNER NOTES:

1. ELEVATIONS SHALL BE ADJUSTED FOR SITE SPECIFIC TERRAIN.

US ARMY CORPS OF ENGINEERS
OMAHA DISTRICT

MARK	DESCRIPTION	DATE	APPR.

MARK	DESCRIPTION	DATE	APPR.

DESIGNED BY: WRB
DWN BY: WRB
CKD BY: BNH
SUBMITTED BY: BNH
FILE NAME: 0040S-301.dwg
SIZE: 841x559
PLOT SCALE: 1 / mm
DATE: JULY 2010
SOLICITATION NO.: W9128F-0X-X-00XX
CONTRACT NO.: W9128F-0X-C-00XX
FILE NUMBER: X
PLOT DATE: 7/21/2010

U. S. ARMY ENGINEER DISTRICT
CORPS OF ENGINEERS
OMAHA, NEBRASKA

DOD, CUT'N'COVER STANDARDS
FILTER BUILDING

FOUNDATION DETAILS

SHEET IDENTIFICATION NUMBER
S-301

I:\dwgs\struct\0040S-301.dwg
g6edxncd

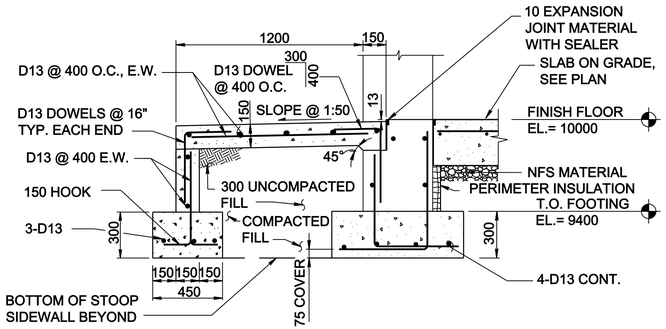

SECTION 7 S-101 | S-301

0 200 400 800
SCALE: 1:20

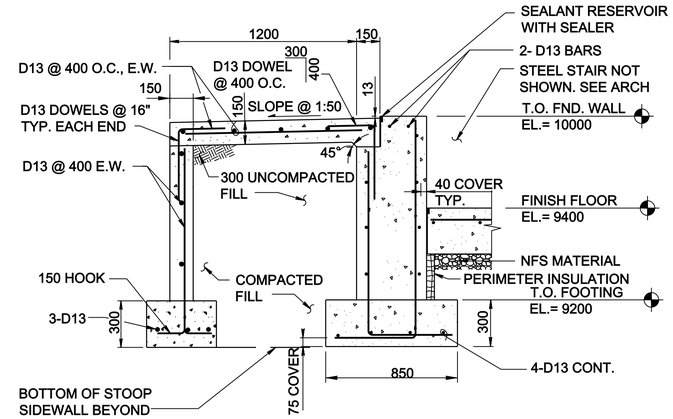

SECTION 8 S-101 | S-301

0 200 400 800
SCALE: 1:20

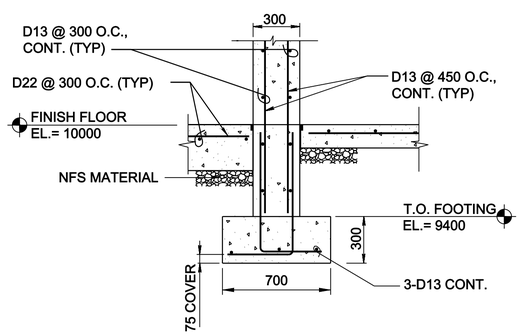

SECTION 9 S-101 | S-302

0 200 400 800
SCALE: 1:20

DESIGNER NOTES:

1. ELEVATIONS SHALL BE ADJUSTED FOR SITE SPECIFIC TERRAIN.

US ARMY CORPS
OF ENGINEERS
OMAHA DISTRICT

MARK	DESCRIPTION	DATE	APPR.

MARK	DESCRIPTION	DATE	APPR.

U. S. ARMY ENGINEER DISTRICT
CORPS OF ENGINEERS
OMAHA, NEBRASKA

DESIGNED BY: WRB | DATE: JULY 2010
DWN BY: WRB | CKD BY: BMH | SOLICITATION NO.: W912BF-0X-X-00XX
SUBMITTED BY: BMH | CONTRACT NO.: W912BF-0X-C-00XX
FILE NAME: 00405-302.dwg | FILE NUMBER: X
SIZE: 841x559 | PLOT SCALE: 1 = mm | PLOT DATE: 7/21/2010

DOD, CUT/N/COVER STANDARDS
FILTER BUILDING

FOUNDATION DETAILS

SHEET
IDENTIFICATION
NUMBER
S-302

I:\dwgs\struct\00405-302.dwg
g6advncd

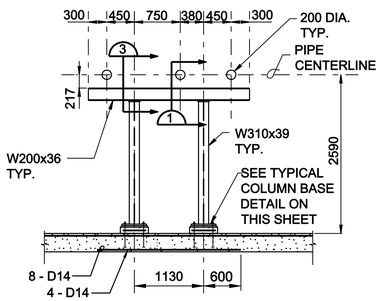

SECTION 14 PS-9
S-102 | S-303

0 500 1000 2000
SCALE: 1:50

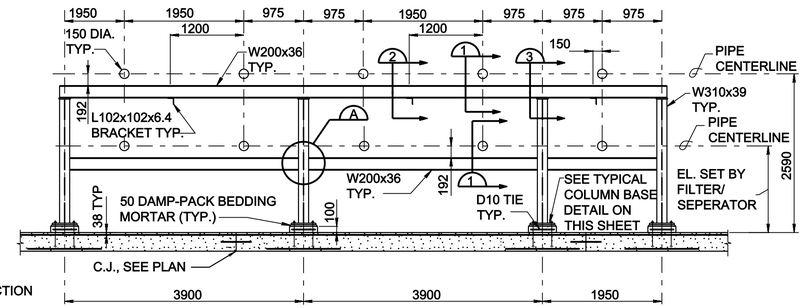

NOTE: SEE SECTION 15, THIS SHEET, FOR ADDITIONAL INFORMATION

SECTION 15 PS-12
S-102 | S-303

0 500 1000 2000
SCALE: 1:50

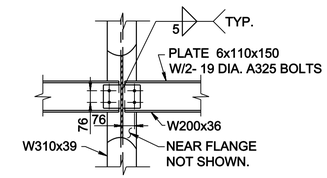

SINGLE PLATE SHEAR CONNECTION DETAIL A

0 200 400 800
SCALE: 1:20

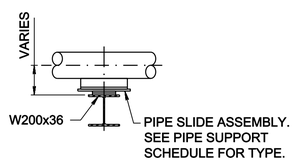

SECTION 1

0 200 400 800
SCALE: 1:20

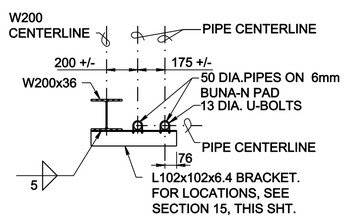

SECTION 2

0 200 400 800
SCALE: 1:20

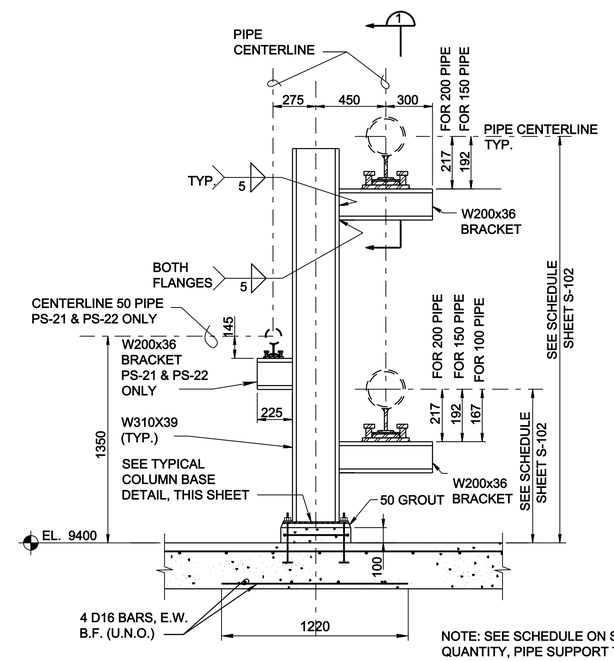

NOTE: SEE SCHEDULE ON SHT. S-102 FOR QUANTITY, PIPE SUPPORT TYPE, PIPE DIA., CENTERLINE ELEV AND NUMBER OF SUPPORTS

SECTION 16
S-102 | S-303

0 200 400 800
SCALE: 1:20

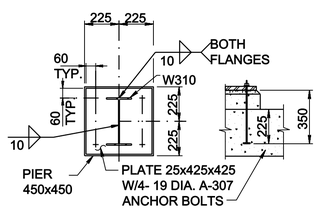

TYPICAL COLUMN BASE

0 200 400 800
SCALE: 1:20

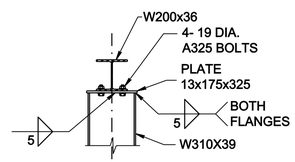

SECTION 3

0 200 400 800
SCALE: 1:20

DESIGNER NOTES:

1. ELEVATIONS SHALL BE ADJUSTED FOR SITE SPECIFIC TERRAIN.

US ARMY CORPS OF ENGINEERS
OMAHA DISTRICT

MARK	DESCRIPTION	DATE	APPR.

MARK	DESCRIPTION	DATE	APPR.

U. S. ARMY ENGINEER DISTRICT
CORPS OF ENGINEERS
OMAHA, NEBRASKA

DESIGNED BY: WRB | DATE: JULY 2010
DWN BY: WRB | CKD BY: BMH | SOLICITATION NO.: W912BF-DX-X-003X
SUBMITTED BY: BMH | CONTRACT NO.: W912BF-DX-C-00XX
FILE NAME: 00405-303.dwg | FILE NUMBER: X
SIZE: 841x559 | PLOT SCALE: 1 / mm | PLOT DATE: 7/21/2010

DOD, CUT/COVER STANDARDS
FILTER BUILDING

PIPE SUPPORT SECTIONS AND DETAILS

SHEET IDENTIFICATION NUMBER
S-303

I:\dwgs\struct\00405-303.dwg
g6exnxcd

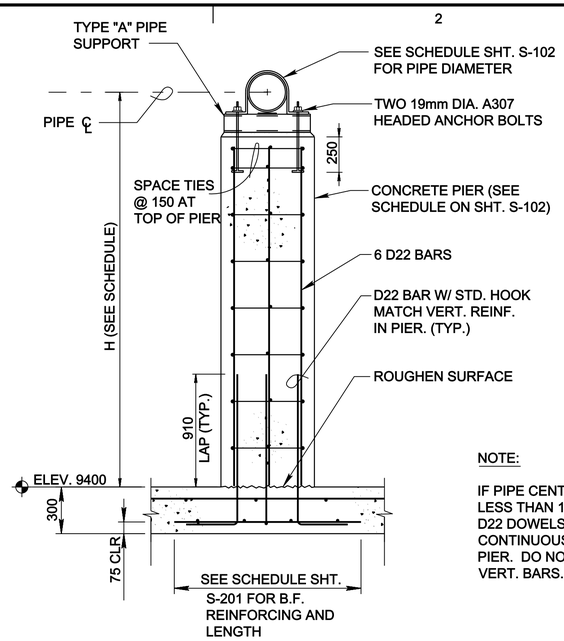

NOTE:

IF PIPE CENTERLINE IS LESS THAN 1370 PROVIDE D22 DOWELS WITH STD. HOOK CONTINUOUS TO TOP OF PIER. DO NOT PROVIDE D22 VERT. BARS.

SECTION 17 S-102 | S-304

0 200 400 800
SCALE: 1:20

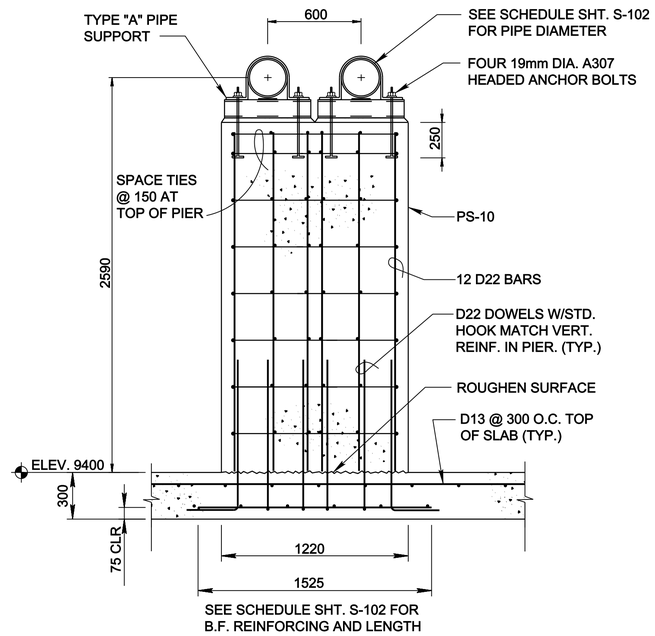

SECTION 18 S-102 | S-304

0 200 400 800
SCALE: 1:20

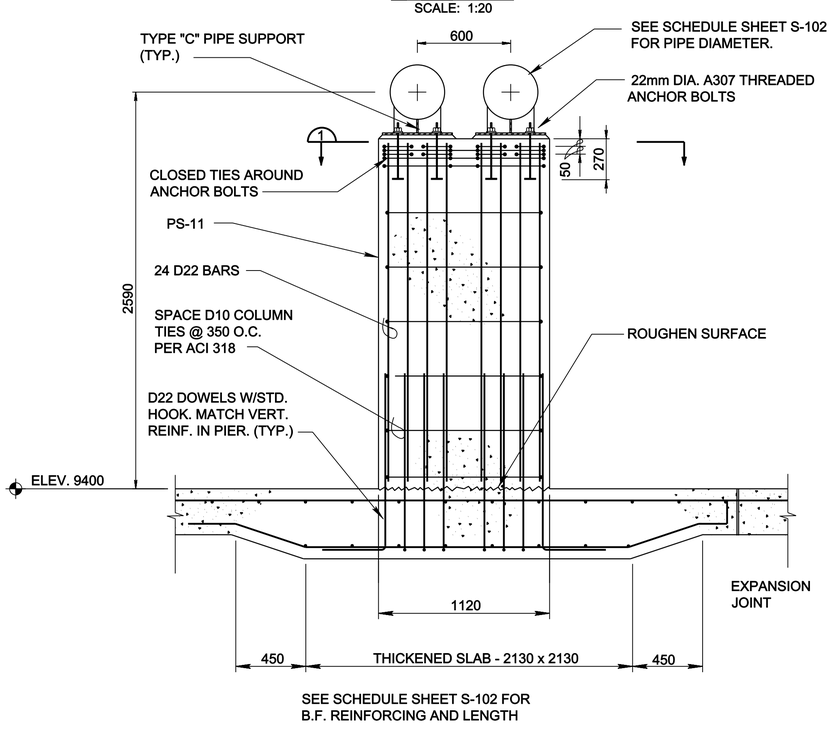

SECTION 19 S-102 | S-304

0 200 400 800
SCALE: 1:20

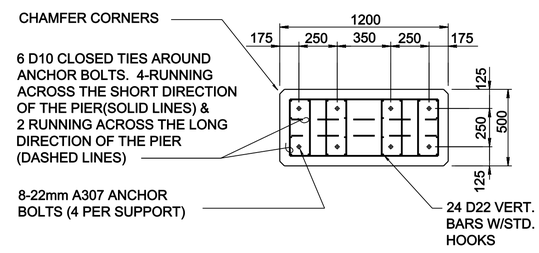

SECTION 1

0 200 400 800
SCALE: 1:20

DESIGNER NOTES:

1. ELEVATIONS SHALL BE ADJUSTED FOR SITE SPECIFIC TERRAIN.

US ARMY CORPS OF ENGINEERS
OMAHA DISTRICT

MARK	DESCRIPTION	DATE	APPR.

MARK	DESCRIPTION	DATE	APPR.

U. S. ARMY ENGINEER DISTRICT
CORPS OF ENGINEERS
OMAHA, NEBRASKA

DESIGNED BY: WRB | DWN BY: WRB | CKD BY: BWM | SUBMITTED BY: BWM | FILE NAME: OD405-304.dwg | FILE NUMBER: X | SIZE: 841x559 | PLOT SCALE: 1:000 / mm | PLOT DATE: 7/21/2010

DATE: JULY 2010
SOLICITATION NO.: W912BF-10-X-100XX
CONTRACT NO.: W912BF-10-C-50XX

DOD, CUTN'COVER STANDARDS
FILTER BUILDING

PIPE SUPPORT SECTIONS AND DETAILS

SHEET IDENTIFICATION NUMBER
S-304

i:\dwgs\struct\OD405-304.dwg

q6edsncd

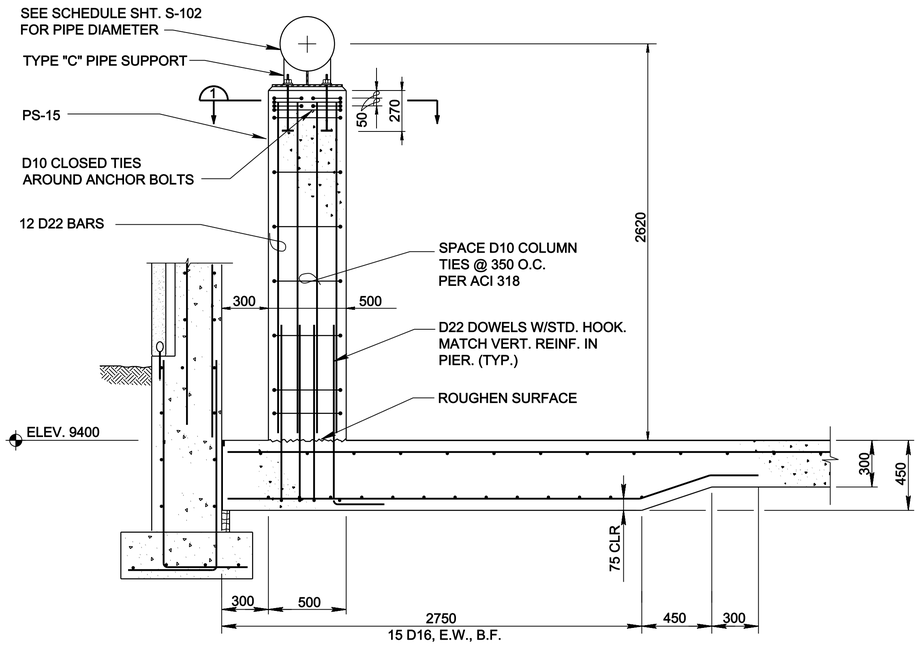

SECTION 20
S-102 | S-305

SCALE: 1:20

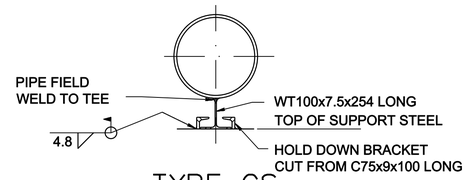

TYPE GS
GUIDED SUPPORT

NOTES:

1. SEE SHEETS MD.01 FOR LOCATION OF "GS" PIPE SUPPORT
2. ANCHOR BOLTS SHALL BE HEADED BOLTS CONFORMING TO ASTM A325 OR SMOOTH ROD WITH THREADED ENDS CONFORMING TO ASTM A449.

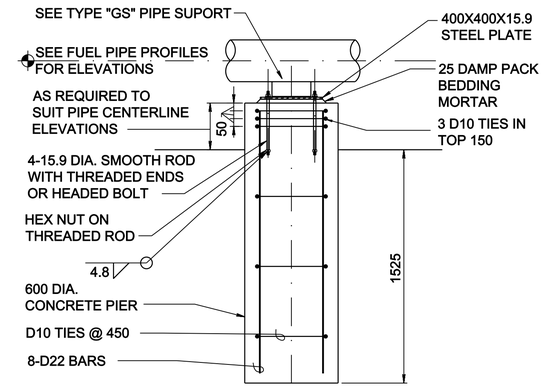

TYPICAL PIER DETAIL @ "GS" PIPE SUPPORT

NO SCALE

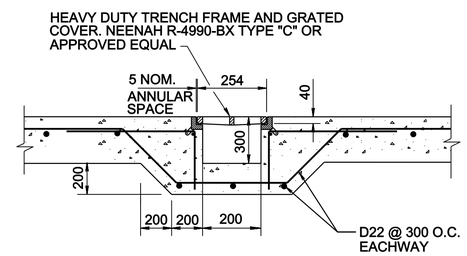

PIPE TRENCH DETAIL

NO SCALE

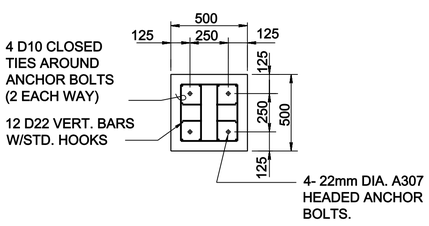

SECTION 1

SCALE: 1:20

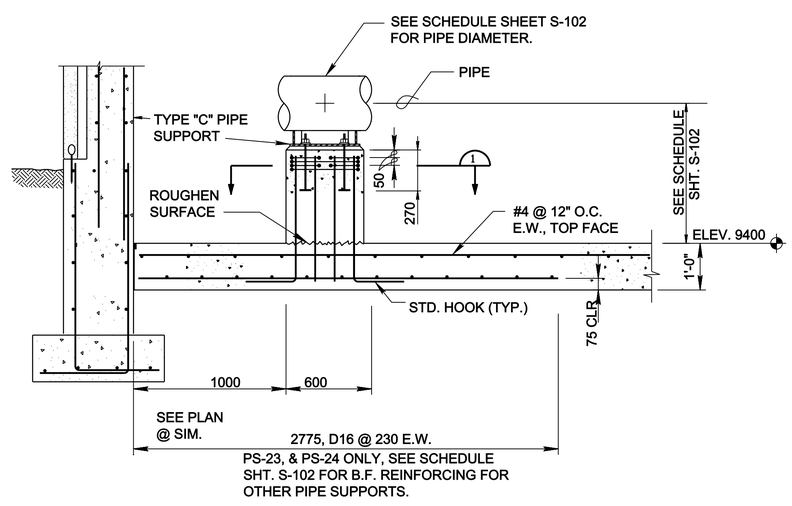

SECTION 21
S-102 | S-305

SCALE: 1:20

DESIGNER NOTES:

1. ELEVATIONS SHALL BE ADJUSTED FOR SITE SPECIFIC TERRAIN.

US ARMY CORPS
OF ENGINEERS
OMAHA DISTRICT

MARK	DESCRIPTION	DATE	APPR.

MARK	DESCRIPTION	DATE	APPR.

U. S. ARMY ENGINEER DISTRICT
CORPS OF ENGINEERS
OMAHA, NEBRASKA

DESIGNED BY: WRB | DATE: JULY 2010
DWN BY: WRB | CKD BY: BWH | SOLICITATION NO.: W912BF-DX-X-00XX
SUBMITTED BY: BWH | CONTRACT NO.: W912BF-DX-C-00XX
FILE NAME: 00405-305.dwg | FILE NUMBER: X
SIZE: 841x559 | PLOT SCALE: 1:000 / mm | PLOT DATE: 7/21/2010

DOD, CUTN'COVER STANDARDS
FILTER BUILDING

PIPE SUPPORT SECTIONS AND DETAILS

SHEET
IDENTIFICATION
NUMBER
S-305

I:\dwgs\struct\00405-305.dwg

g6edxncd