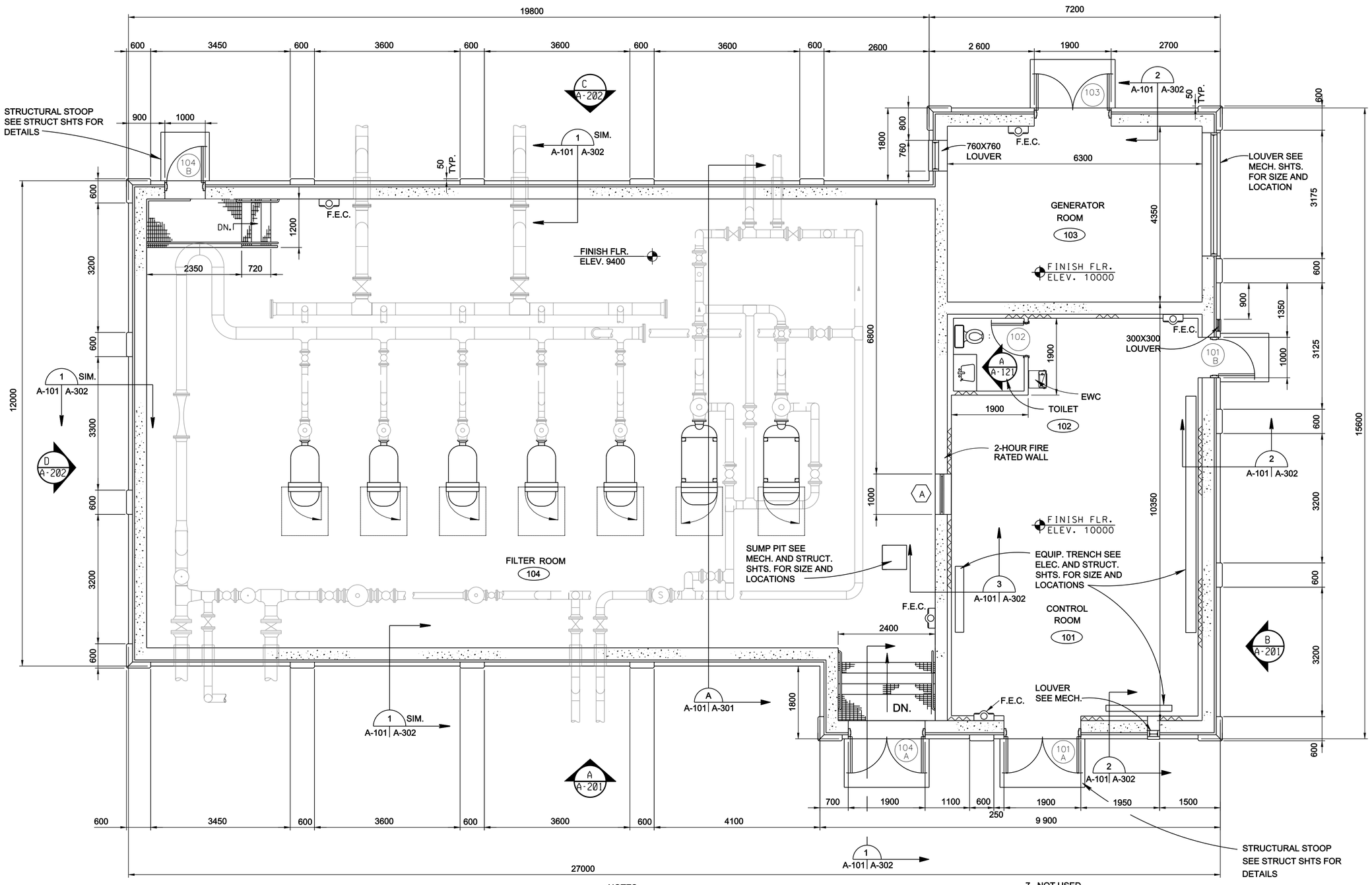

FLOOR PLAN

0 1000 2000 MM
SCALE: 1 : 50

NOTES:

1. ALL METAL STUDS ALONG CONCRETE WALLS SHALL BE 100mm
2. ALL CHANGES IN FLOOR MATERIAL SHALL OCCUR AT THE CENTER LINE OF THE DOOR IN THE CLOSED POSITION UNLESS OTHERWISE INDICATED.
3. SEE STRUCTURAL DRAWINGS FOR DIMENSIONS AND DETAILS OF FLOOR EQUIPMENT PADS.
4. SEE MECHANICAL AND ELECTRICAL DRAWINGS FOR EQUIPMENT.
5. CONTRACTOR SHALL COORDINATE ALL JOINT LOCATIONS WITH OPENINGS.
7. NOT USED.
8. PRECAST PANELS ARE INDICATED ON THE DRAWINGS AS THE MINIMUM THICKNESS OF 100mm. SELECTION AND APPROVAL OF A DIFFERENT THICK PANELS BY THE CONTRACTOR WILL NEED TO ADJUST ALL BUILDING DIMENSIONS TO ACCOMODATE THE THICKER PANEL. THIS WILL INCLUDE BUT NOT LIMITED TO OVERALL DIMENSIONS, WALL THICKNESS DIMENSIONS, AND FOUNDATION DIMENSIONS.
9. SEE ELECTRICAL AND STRUCTURAL SHEETS FOR TRENCH LOCATIONS IN CONTROL ROOM.

US ARMY CORPS OF ENGINEERS
OMAHA DISTRICT

MARK	DESCRIPTION	DATE	APPR.

MARK	DESCRIPTION	DATE	APPR.

DESIGNED BY: M.D.MORRISON
DATE: JULY 2010
DWN BY: M.D.M.
CKD BY: G.T.B.
SOLICITATION NO.: W912BF-10-X-003X
SUBMITTED BY: G.T.B.
CONTRACT NO.: W912BF-10-C-003XX
FILE NAME: 0040A-101.dwg
FILE NUMBER: 0040A-101.DWG
SIZE: 841x559
PLOT SCALE: 25 13/32 " / in.
PLOT DATE: 6/29/2010

U. S. ARMY ENGINEER DISTRICT
CORPS OF ENGINEERS
OMAHA, NEBRASKA

DOD, CUTNCOVER STANDARDS
FILTER BUILDING

FLOOR PLAN

SHEET IDENTIFICATION NUMBER
A-101

i:\dwgs\arch\0040A-101.dwg
gBedvmdm

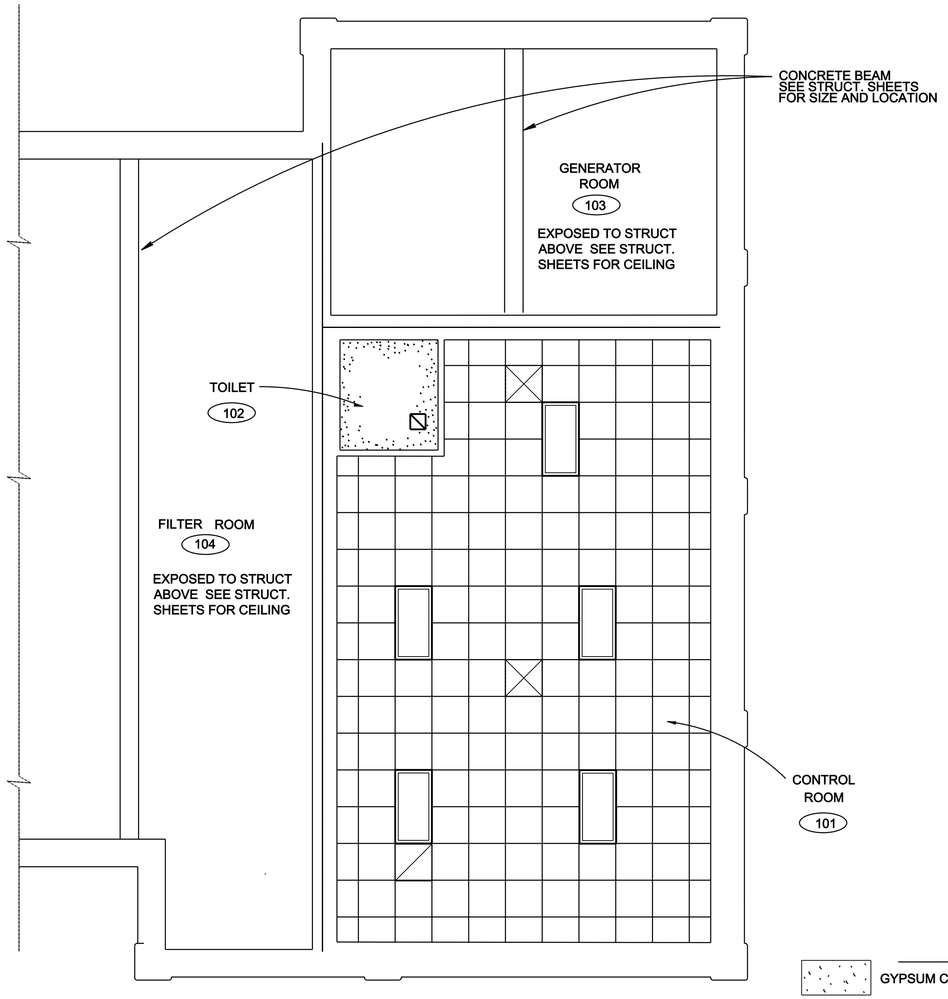

REFLECTED CEILING PLAN

0 1000 2000 MM
SCALE: 1 : 50

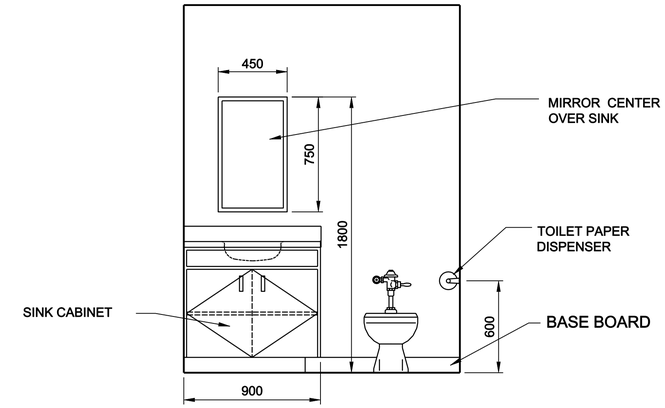

TOILET ROOM ELEVATION

0 200 400 600 800 MM
SCALE: 1 : 20

LEGEND:

- GYPSUM CEILING
- 2 X 2 ACOUSTICAL CEILING TILE
- 2 X 4 LIGHT FIXTURE (SEE ELECTRICAL)
- 2 HOUR FIRE WALL
- LIGHT FIXTURE (SEE ELECTRICAL)
- RECESSED LIGHT FIXTURE (SEE ELECTRICAL)
- RETURN AIR GRILL OR EXHAUST GRILL (SEE MECHANICAL)
- SUPPLY AIR DIFFUSER (SEE MECHANICAL)

US ARMY CORPS
OF ENGINEERS
OMAHA DISTRICT

MARK	DESCRIPTION	DATE	APPR.

MARK	DESCRIPTION	DATE	APPR.

U. S. ARMY ENGINEER DISTRICT
CORPS OF ENGINEERS
OMAHA, NEBRASKA

DESIGNED BY: M.D.MORRISON
DWN BY: M.D.M.
CKD BY: C.F.B.
SUBMITTED BY: M.D.M.
FILE NAME: 0040A-121.dwg
SIZE: 841x559
PLOT SCALE: 25 13/32 / in.
DATE: JULY 2010
SOLICITATION NO.: W9128F-0X-X-00XX
CONTRACT NO.: W9128F-0X-C-00XX
FILE NUMBER: X
PLOT DATE: 6/29/2010

DOD, CUTN'COVER STANDARDS
FILTER BUILDING

REFLECTED CEILING PLAN
AND INTERIOR ELEVATION

SHEET
IDENTIFICATION
NUMBER
A-121

g6edxmdm I:\dwgs\arch\0040A-121.dwg

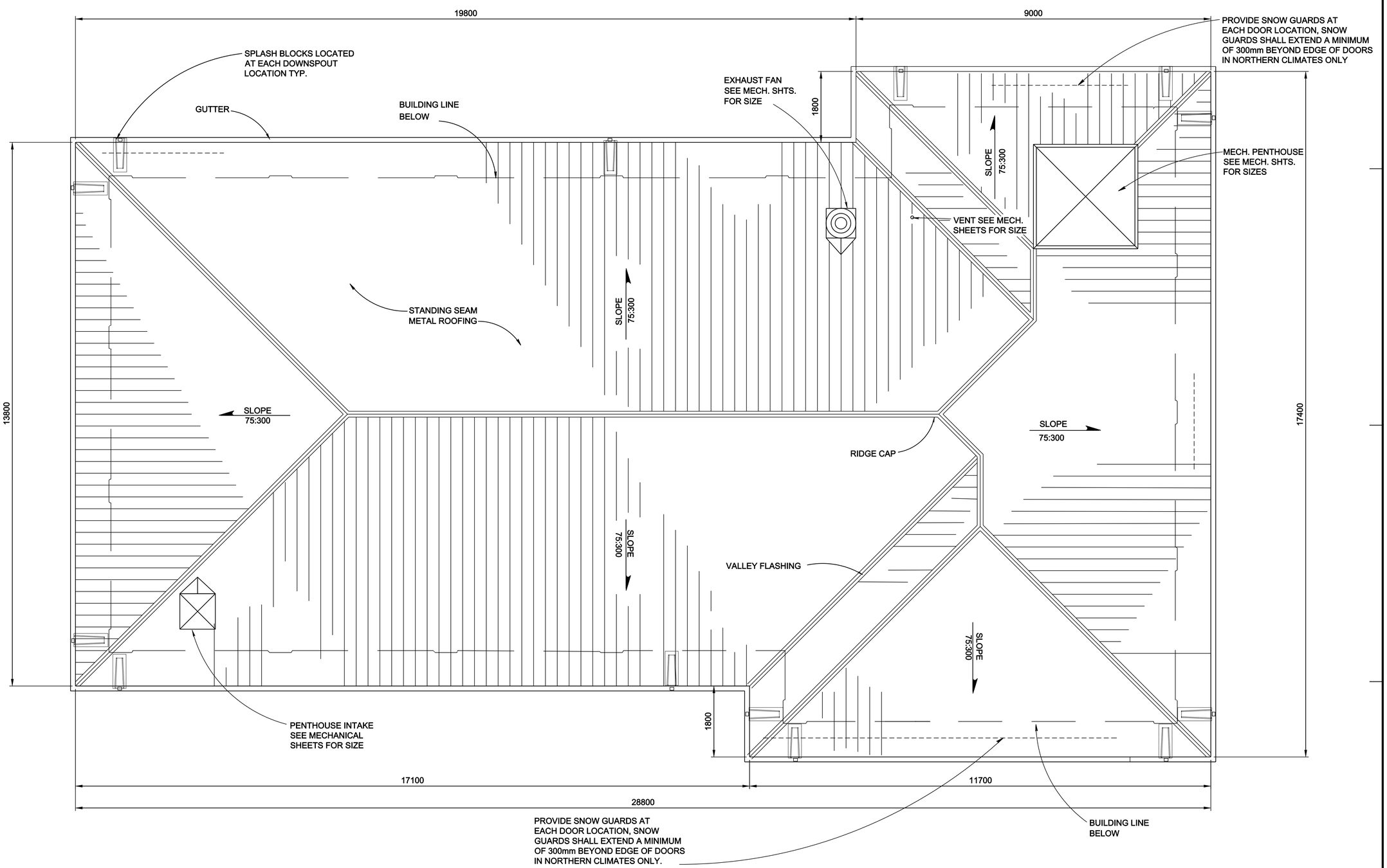

ROOF PLAN

0 1000 2000 MM
SCALE: 1 : 50

US ARMY CORPS OF ENGINEERS
OMAHA DISTRICT

MARK	DESCRIPTION	DATE	APPR.

MARK	DESCRIPTION	DATE	APPR.

DESIGNED BY: M.D.MORRISON
DWN BY: M.D.M.
CKD BY: C.F. B.
SUBMITTED BY: C.J.A.
DATE: JULY 2010
SOLICITATION NO.: W912EF-10-X-00XX
CONTRACT NO.: W912EF-10-C-00XX
FILE NAME: 0D40A-131.dwg
FILE NUMBER: 0D40A-131.DWG
SIZE: 841x559
PLOT SCALE: 25 13/32 / in.
PLOT DATE: 6/29/2010

U. S. ARMY ENGINEER DISTRICT
CORPS OF ENGINEERS
OMAHA, NEBRASKA

DOD, CUTN'COVER STANDARDS
FILTER BUILDING

ROOF PLAN

SHEET IDENTIFICATION NUMBER
A-131

I:\dwgs\arch\0D40A-131.dwg
g6edxmdm

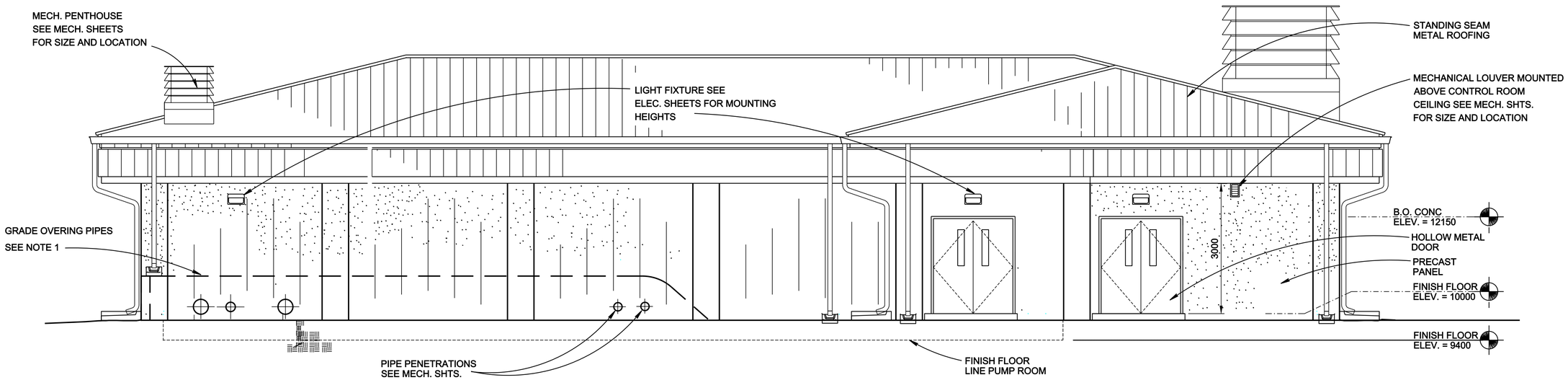

BUILDING ELEVATION

A
A-101 | A-201

0 1000 2000 MM
SCALE: 1 : 50

NOTES:

1. PROVIDE A MINIMUM OF 1 METER EARTH COVER OVER ALL JET FUEL LINES, EXCEPTION WOULD BE AT THE PIG LUNCH LOCATIONS, SEE CIVIL SHEETS.

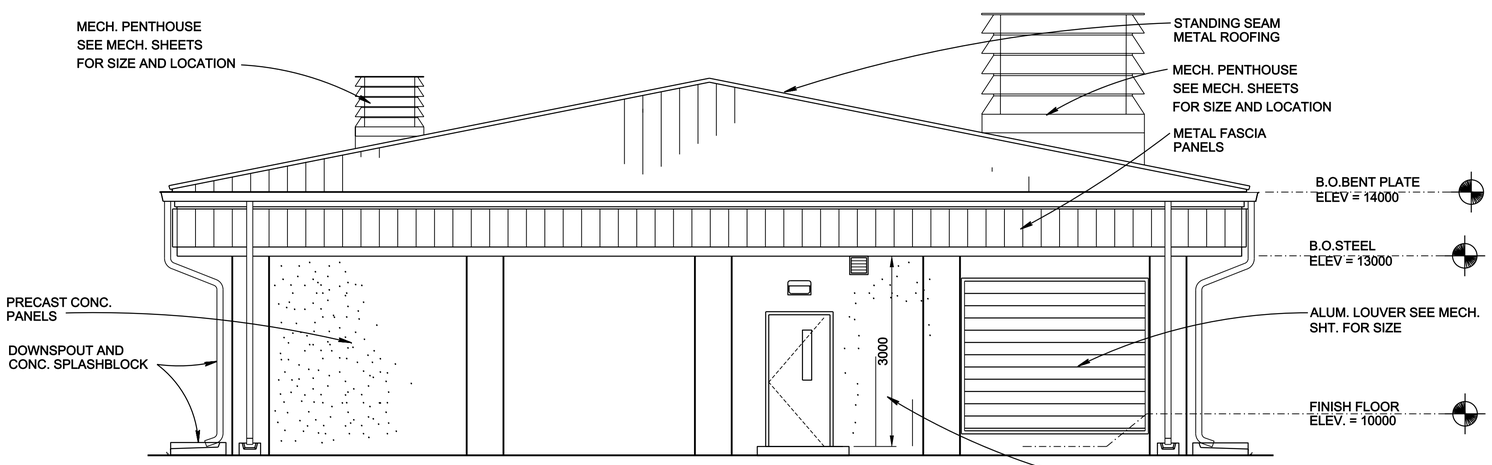

BUILDING ELEVATION

B
A-101 | A-201

0 1000 2000 MM
SCALE: 1 : 50

US ARMY CORPS
OF ENGINEERS
OMAHA DISTRICT

MARK	DESCRIPTION	DATE	APPR.

MARK	DESCRIPTION	DATE	APPR.

U. S. ARMY ENGINEER DISTRICT
CORPS OF ENGINEERS
OMAHA, NEBRASKA

DESIGNED BY: M.D.MORRISON
DATE: JULY 2010
DWN BY: M.D.M.
CKD BY: C.F.B.
SOLICITATION NO.: W912BF-0X-X-00X
SUBMITTED BY: C.F.B.
CONTRACT NO.: W912BF-0X-C-00X
FILE NAME: OD40A-201.dwg
FILE NUMBER: OD40A-201.DWG
SIZE: 841x559
PLOT SCALE: 25 / in.
PLOT DATE: 6/29/2010

DOD, CUTN'COVER STANDARDS
FILTER BUILDING

BUILDING ELEVATIONS

SHEET
IDENTIFICATION
NUMBER
A-201

I:\dwgs\arch\OD40A-201.dwg

g6edxmdm

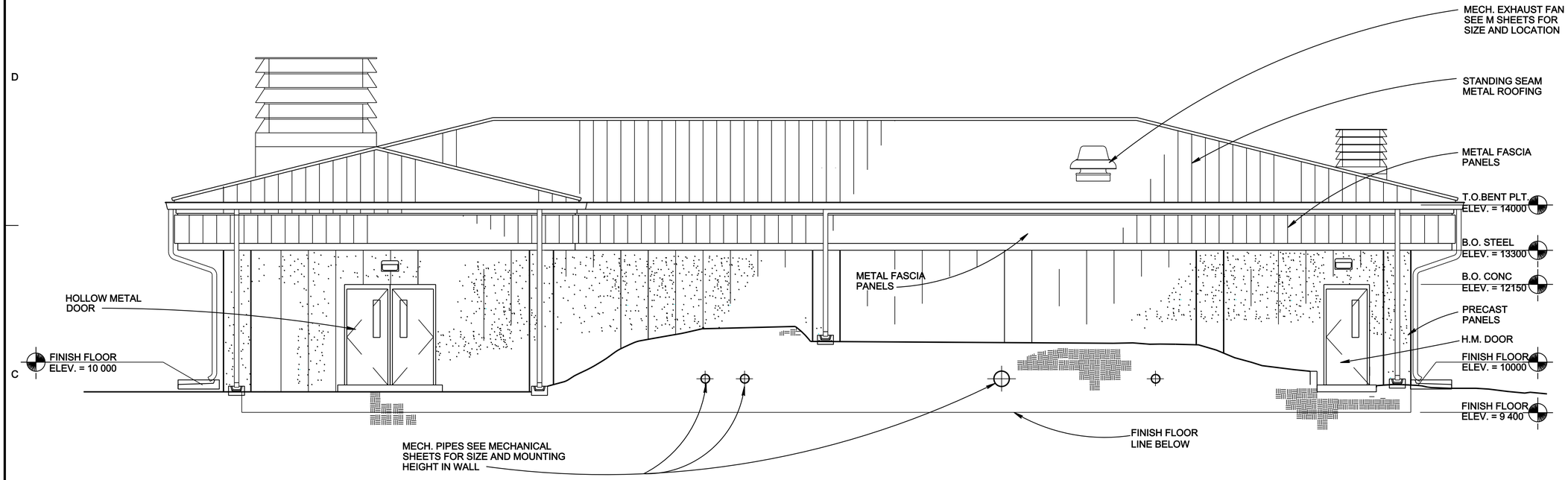

BUILDING ELEVATION

C
A-101 A-202

0 1 2 M
SCALE: 1 : 50

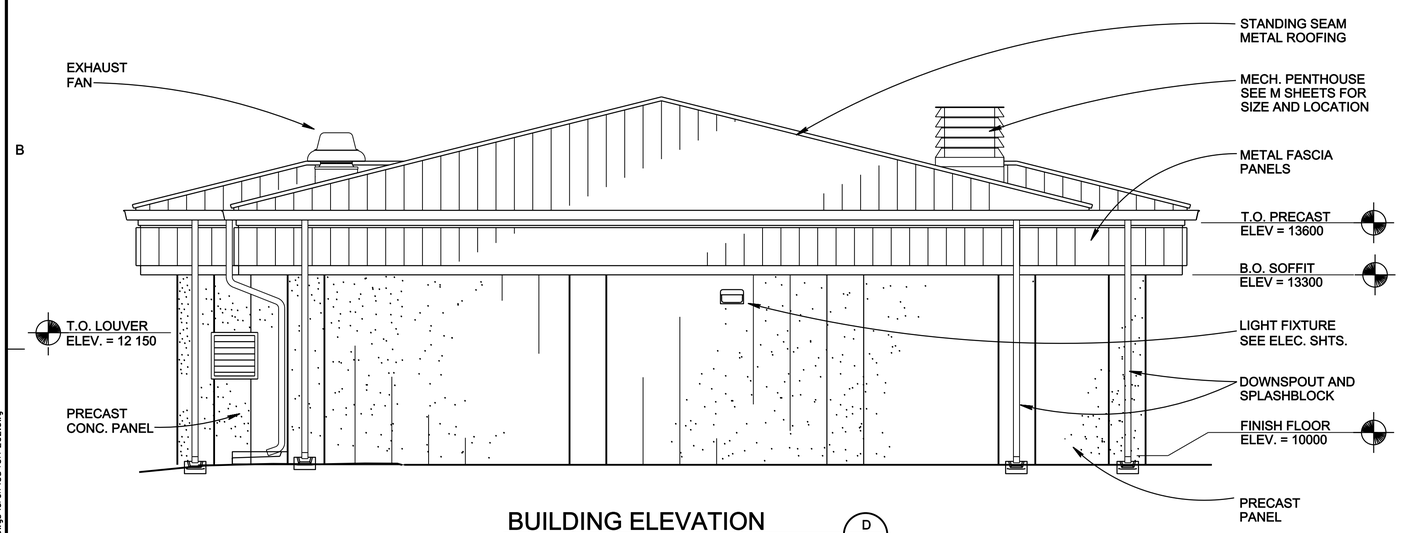

BUILDING ELEVATION

D
A-101 A-202

0 1 2 M
SCALE: 1 : 50

US ARMY CORPS
OF ENGINEERS
OMAHA DISTRICT

MARK	DESCRIPTION	DATE	APPR.

MARK	DESCRIPTION	DATE	APPR.

U. S. ARMY ENGINEER DISTRICT
CORPS OF ENGINEERS
OMAHA, NEBRASKA

DESIGNED BY: M.D.MORRISON
DATE: JULY 2010
DWN BY: M.D.M.
CKD BY: C.F.B.
SOLICITATION NO.: W912BF-0X-X-00XX
SUBMITTED BY: S.E.R.
CONTRACT NO.: W912BF-0X-C-00XX
FILE NAME: 0D40A-202.dwg
FILE NUMBER: 0D40A-202.DWG
SIZE: 841x559
PLOT SCALE: 25 / in.
PLOT DATE: 6/29/2010

DOD, CUTN'COVER STANDARDS
FILTER BUILDING

BUILDING ELEVATIONS

SHEET
IDENTIFICATION
NUMBER
A-202

I:\dwgs\arch\0D40A-202.dwg

g6edkmdm

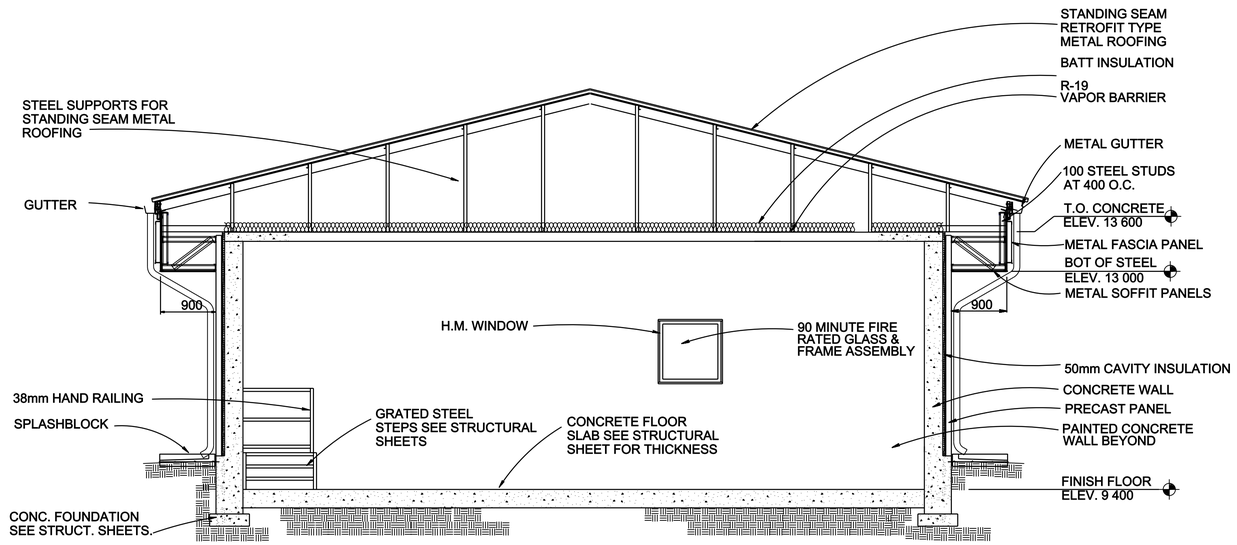

BUILDING SECTION

A
A-101 A-301

0 1000 2000 MM
SCALE: 1 : 50

US ARMY CORPS OF ENGINEERS
OMAHA DISTRICT

MARK	DESCRIPTION	DATE	APPR.

MARK	DESCRIPTION	DATE	APPR.

U. S. ARMY ENGINEER DISTRICT
CORPS OF ENGINEERS
OMAHA, NEBRASKA

DESIGNED BY: M.D. MORRISON
DATE: JUL Y 2010
DWN BY: M.D.M.
CKD BY: C.F.B.
SOLICITATION NO.: W912BF-10-X-0034
SUBMITTED BY: C.F.B.
CONTRACT NO.: W912BF-10-C-0044
FILE NAME: 0040A-301.dwg
FILE NUMBER: 0040A-301DWG
SIZE: 841x559
PLOT SCALE: 25 / in.
PLOT DATE: 6/29/2010

DOD, CUTN'COVER STANDARDS
FILTER BUILDING

BUILDING SECTION

SHEET IDENTIFICATION NUMBER
A-301

g86dxmdm I:\dwgs\arch\0040A-301.dwg

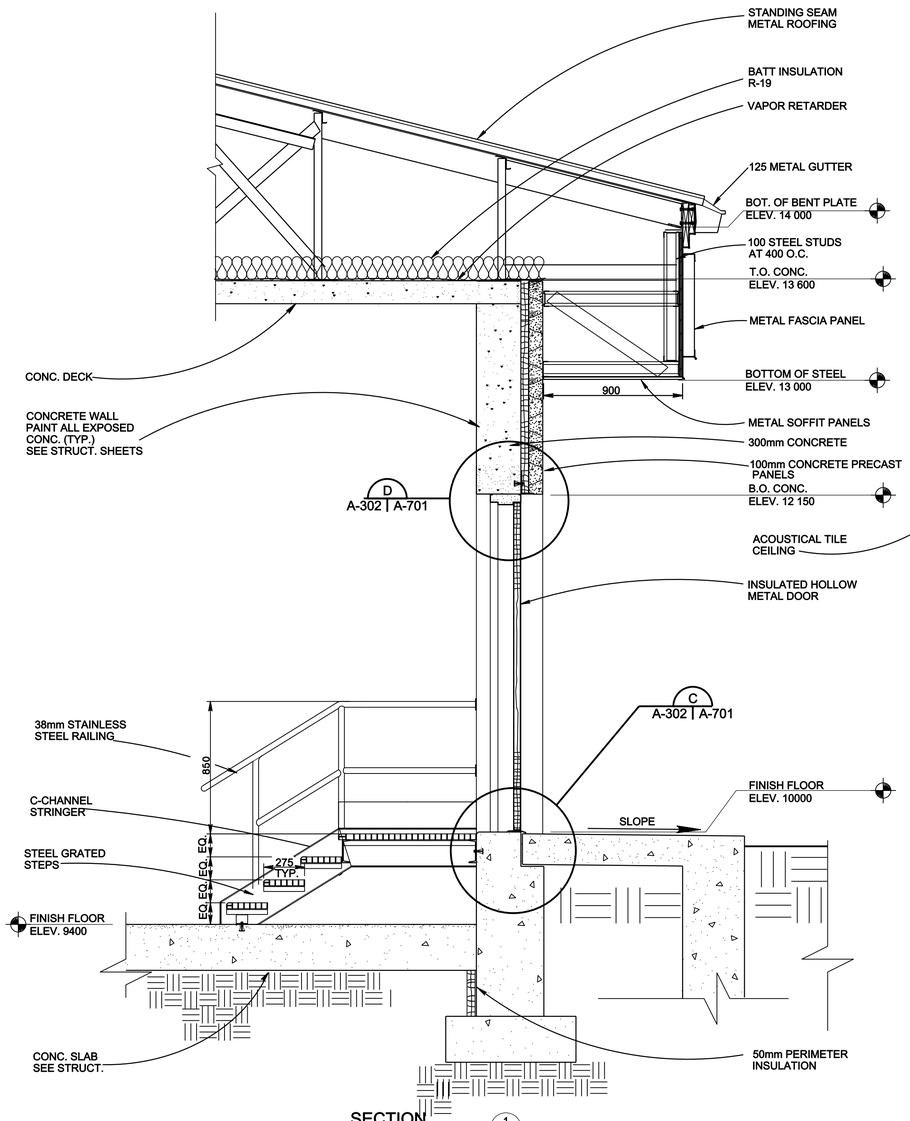

SECTION 1 A-101 | A-302

0 200 400 600 800 MM
SCALE: 1 : 20

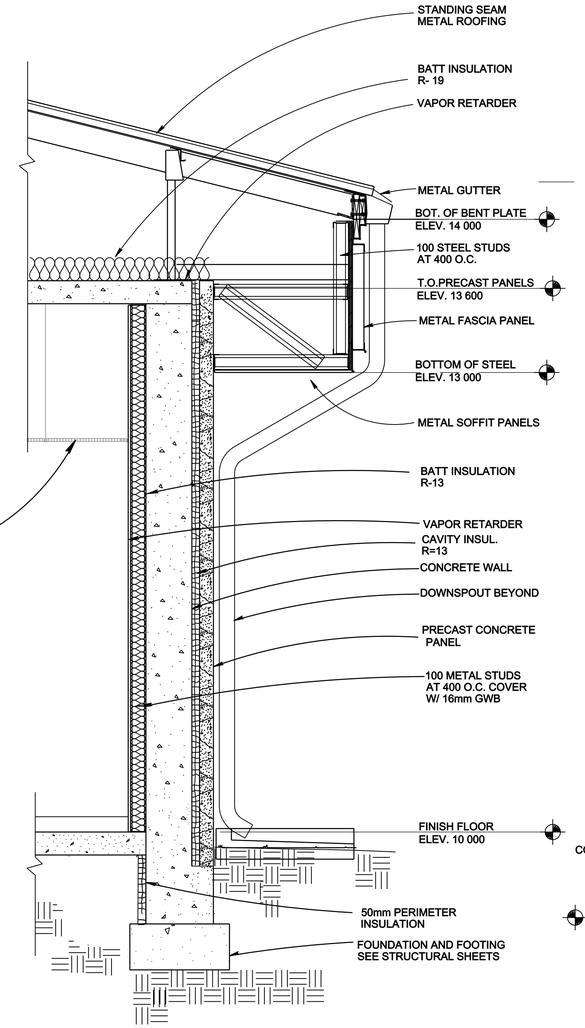

SECTION 2 A-101 | A-302

0 200 400 600 800 MM
SCALE: 1 : 20

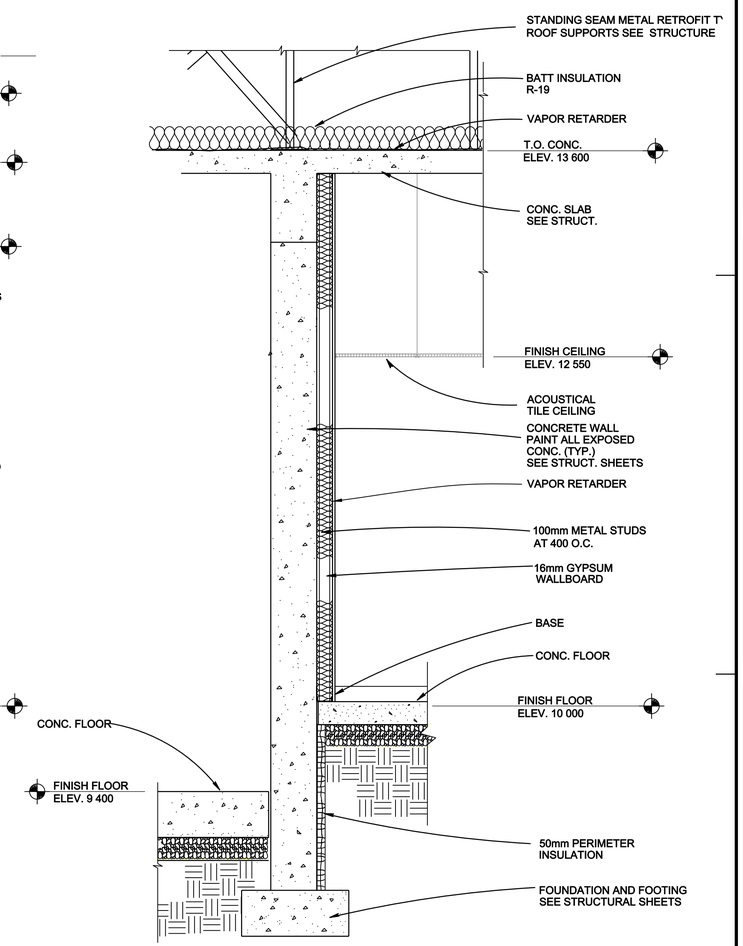

SECTION 3 A-101 | A-302

0 200 400 600 800 MM
SCALE: 1 : 20

US ARMY CORPS OF ENGINEERS
OMAHA DISTRICT

MARK	DESCRIPTION	DATE	APPR.

MARK	DESCRIPTION	DATE	APPR.

DATE: JUL Y 2010
SOLICITATION NO.: W912BF-10-X-0XXX
CONTRACT NO.: W912BF-10-C-0XXX
FILE NUMBER: X
PLOT DATE: 6/29/2010

DESIGNED BY: X
CKD BY: X
DWN BY: X
SUBMITTED BY: X
FILE NAME: CD40A-302.dwg
SIZE: 841x559
PLOT SCALE: 25 13/32 / in.

U. S. ARMY ENGINEER DISTRICT
CORPS OF ENGINEERS
OMAHA, NEBRASKA

DOD, CUTN'COVER STANDARDS
FILTER BUILDING

WALL SECTIONS

SHEET IDENTIFICATION NUMBER
A-302

i:\dwgs\arch\CD40A-302.dwg

g6edxmdm

ROOM MATERIAL AND FINISH SCHEDULE

RM NO	ROOM NAME	FLOOR								BASE						WALLS NORTH								WALLS SOUTH								WALLS EAST								WALLS WEST								CEILING MAT.					TYPE		HGT.	REMARKS (SEE NOTES)
		CONCRETE	RESILIENT TILE	CARPET	CERAMIC TILE	QUARRY TILE	RAISED FLOORING			NONE REQUIRED	RESILIENT	CERAMIC TILE	QUARRY TILE			CONCRETE	GYPSUM WALLBOARD	PRECAST WALL PANELS	ACOUSTICAL PANELS	OPEN				CONCRETE	GYPSUM WALLBOARD	PRECAST WALL PANELS	ACOUSTICAL PANELS	OPEN				CONCRETE	GYPSUM WALLBOARD	PRECAST WALL PANELS	ACOUSTICAL PANELS	OPEN				CONCRETE	GYPSUM WALLBOARD	PRECAST WALL PANELS	ACOUSTICAL PANELS	OPEN				ACOUSTICAL TILE	GYPSUM WALLBOARD	CONCRETE	METAL DECKING		SUSPENDED	RIGID		
		1	2	3	4	5	6	7	8	1	2	3	4	5	6	1	2	3	4	5	6	7	8	1	2	3	4	5	6	7	8	1	2	3	4	5	6	7	8	1	2	3	4	5	6	7	8	1	2	3	4	5	S	R		
101	CONTROL ROOM		2								2						2								2								2								2							1					S		2550	
102	TOILET		2								2						2								2								2								2								2						R	2400	
103	GENERTOR ROOM	1								1						1								1								1								1										3				R	3450	
104	FILTER ROOM	1								1						1								1								1								1										3				R	4050	

DOOR SCHEDULE

DOOR NO.	DOOR LOCATION	DOOR SIZE	DOOR		FRAME		DETAILS			FIRE LABEL & RATING	HDWR SET	REMARKS (SEE NOTES BELOW)
			TYPE	MAT.	TYPE	MAT.	HEAD	JAMB	SILL			
101A	EXTERIOR TO CONTROL ROOM	900 X 2100 X 44 PAIR	N	HM	A	PS	D/A-701	E/A-701	F/A-701	NONE		
101B	EXTERIOR TO CONTROL ROOM	900 X 2100 X 44	N	HM	A	PS	D/A-701	E/A-701	F/A-701	NONE		
102	CONTROL ROOM TO TOILET	900 X 2100 X 44	F	HM	A	PS	A/A-701	B/A-701		NONE		
103	EXTERIOR TO GENERTOR ROOM	900 X 2100 X 44PAIR	N	HM	A	PS	D/A-701	E/A-701	F/A-701	NONE		
104A	EXTERIOR TO FILTER ROOM	900 X 2100 X 44 PAIR	N	HM	A	PS	D/A-701	E/A-701	C/A-702	NONE		~~SEE NOTE 2~~
104B	EXTERIOR TO FILTER ROOM	900 X 2100 X 44	N	HM	A	PS	D/A-701	E/A-701	C/ A-702	NONE		~~SEE NOTE 2~~
												~~SEE NOTE 2~~

NOTES:

1. COORDINATE THE LOCATION OF DOOR OPENINGS WITH PRECAST CONTRACTOR. PRECAST PANELS SHALL BE ALIGNED WITH DOORS TO ALLOW JOINTS AT DOOR OPENINGS OR CENTERED IN THE PRECAST PANELS.

2. GYPSUM WALL BOARD, METAL STUDS AND BATT INSULATION SHALL ONLY BE SUPPLIED AT DOORS 101A AND 101B

3. GLAZING FOR WINDOW BETWEEN THE CONTROL ROOM AND FILTER ROOM CAN BE FIRE RATED GLASS.

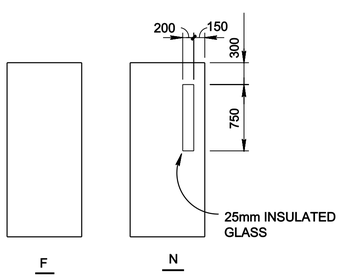

DOOR TYPES
NO SCALE

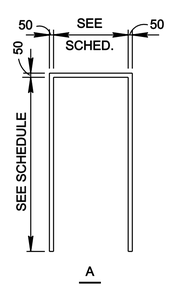

FRAME TYPES
NO SCALE

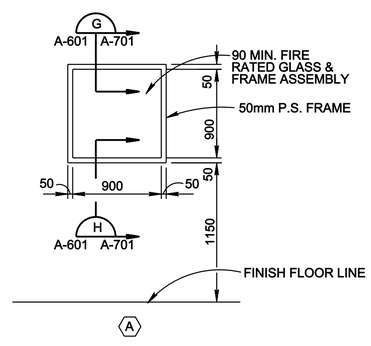

WINDOW TYPES
NO SCALE

OPEN

US ARMY CORPS OF ENGINEERS
OMAHA DISTRICT

MARK	DESCRIPTION	DATE	APPR.

MARK	DESCRIPTION	DATE	APPR.

U. S. ARMY ENGINEER DISTRICT
CORPS OF ENGINEERS
OMAHA, NEBRASKA

DESIGNED BY: M.D.MORRISON
DWN BY: M.D.M.
CKD BY: M.D.M.
SUBMITTED BY: G.E. ?
SIZE: 841x559
PLOT SCALE: 25 / in.
DATE: JULY 2010
SOLICITATION NO.: W912BF-DA-X-003X
CONTRACT NO.: W912BF-DA-C-003X
FILE NUMBER: 0D40A-601.DWG
FILE NAME: 0D40A-601.dwg
PLOT DATE: 6/29/2010

DOD, CUTN'COVER STANDARDS
FILTER BUILDING

DOOR AND ROOM SCHEDULES

SHEET IDENTIFICATION NUMBER
A-601

i:\dwgs\arch\0D40A-601.dwg
g6edxmdm

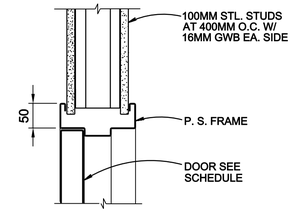

HEAD DETAIL (A) A-601 | A-701

0 100 200 MM
SCALE: 1 : 5

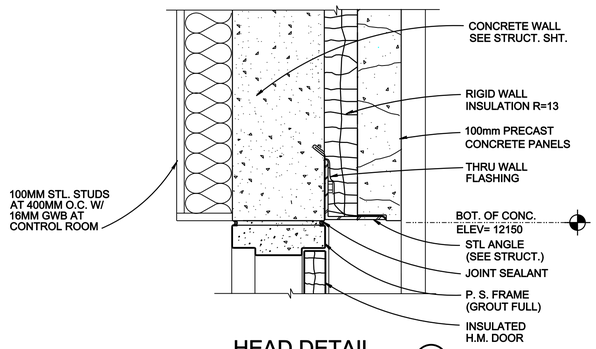

HEAD DETAIL (D) A-601 | A-701

0 100 200 MM
SCALE: 1 : 5

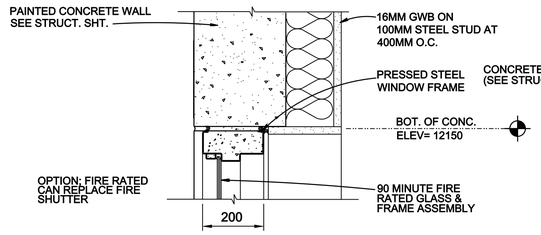

HEAD DETAIL (G) A-601 | A-701

0 100 200 MM
SCALE: 1 : 5

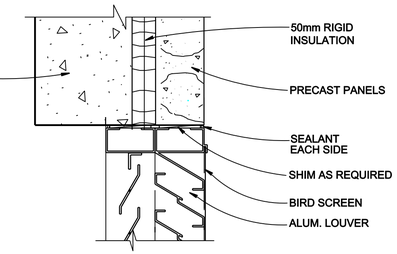

LOUVER DETAIL (I) A4.01 | A7.01

0 100 200 MM
SCALE: 1 : 5

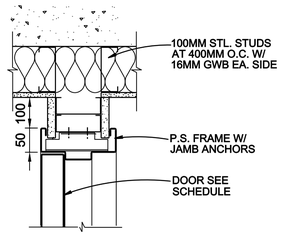

JAMB DETAIL (B) A-601 | A-701

0 100 200 MM
SCALE: 1 : 5

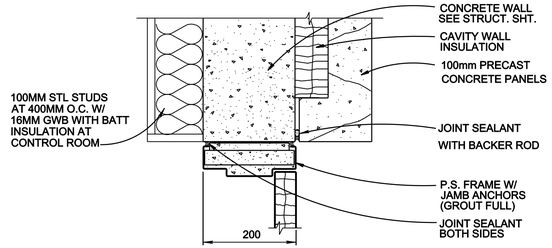

JAMB DETAIL (E) A-601 | A-701

0 100 200 MM
SCALE: 1 : 5

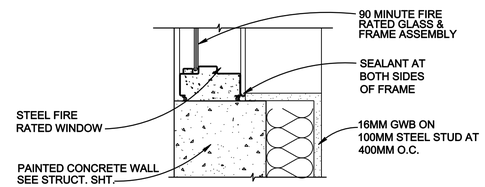

SILL DETAIL (H) A-601 | A-702

0 100 200 MM
SCALE: 1 : 5

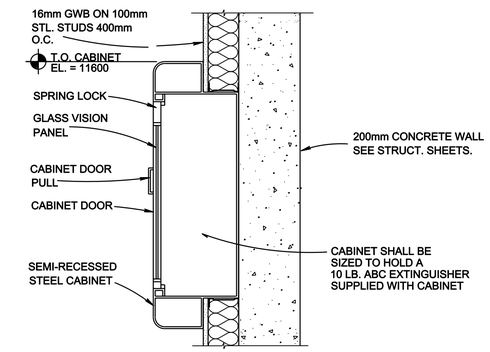

FIRE EXTINGUISHER CABINET (J) A-101 | A-702

0 100 400 MM
SCALE: 1 : 10

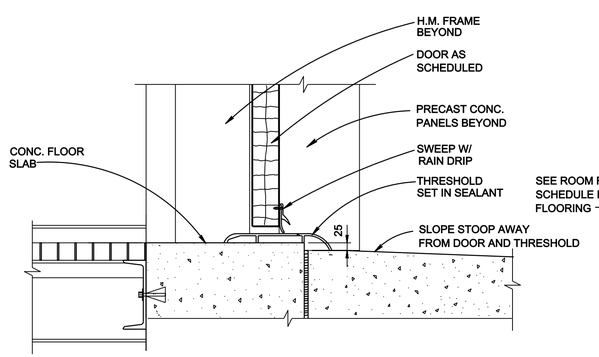

SILL DETAIL (C) A-601 | A-702

0 100 200 MM
SCALE: 1 : 5

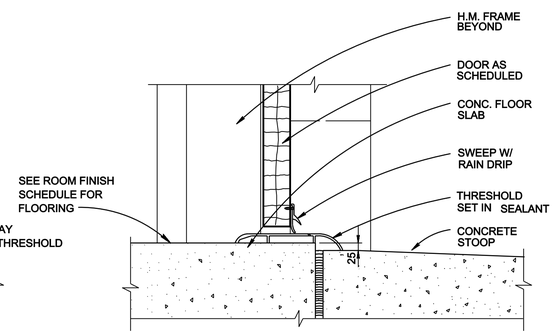

SILL DETAIL (F) A-601 | A-702

0 100 200 MM
SCALE: 1 : 5

NOTES:

1. PROVIDE A VAPOR RETARDER ALONG THE INTERIOR SIDE OF THE BATT INSULATION IN COLD CLIMATE CONDITIONS. LOCATE VAPOR RETARDERS AS REQUIRED BASED ON LOCAL CLIMATE CONDITIONS.

US ARMY CORPS OF ENGINEERS
OMAHA DISTRICT

MARK	DESCRIPTION	DATE	APPR.

MARK	DESCRIPTION	DATE	APPR.

DESIGNED BY: M.D.MORRISON
DWN BY: M.D.M.
CKD BY: C.F.B.
SUBMITTED BY: C.F.B.
FILE NAME: 0D40A-701.dwg
FILE NUMBER: 0D40A-701.DWG
SIZE: 841x559
PLOT SCALE: 25 / in.
DATE: JULY 2010
SOLICITATION NO.: W912BF-10-X-0031
CONTRACT NO.: W912BF-10-C-0031
PLOT DATE: 6/29/2010

U. S. ARMY ENGINEER DISTRICT
CORPS OF ENGINEERS
OMAHA, NEBRASKA

DOD, CUTN'COVER STANDARDS
FILTER BUILDING

DOOR AND WINDOW DETAILS

SHEET IDENTIFICATION NUMBER
A-701

i:\dwgs\arch\0D40A-701.dwg
g6edsmdm