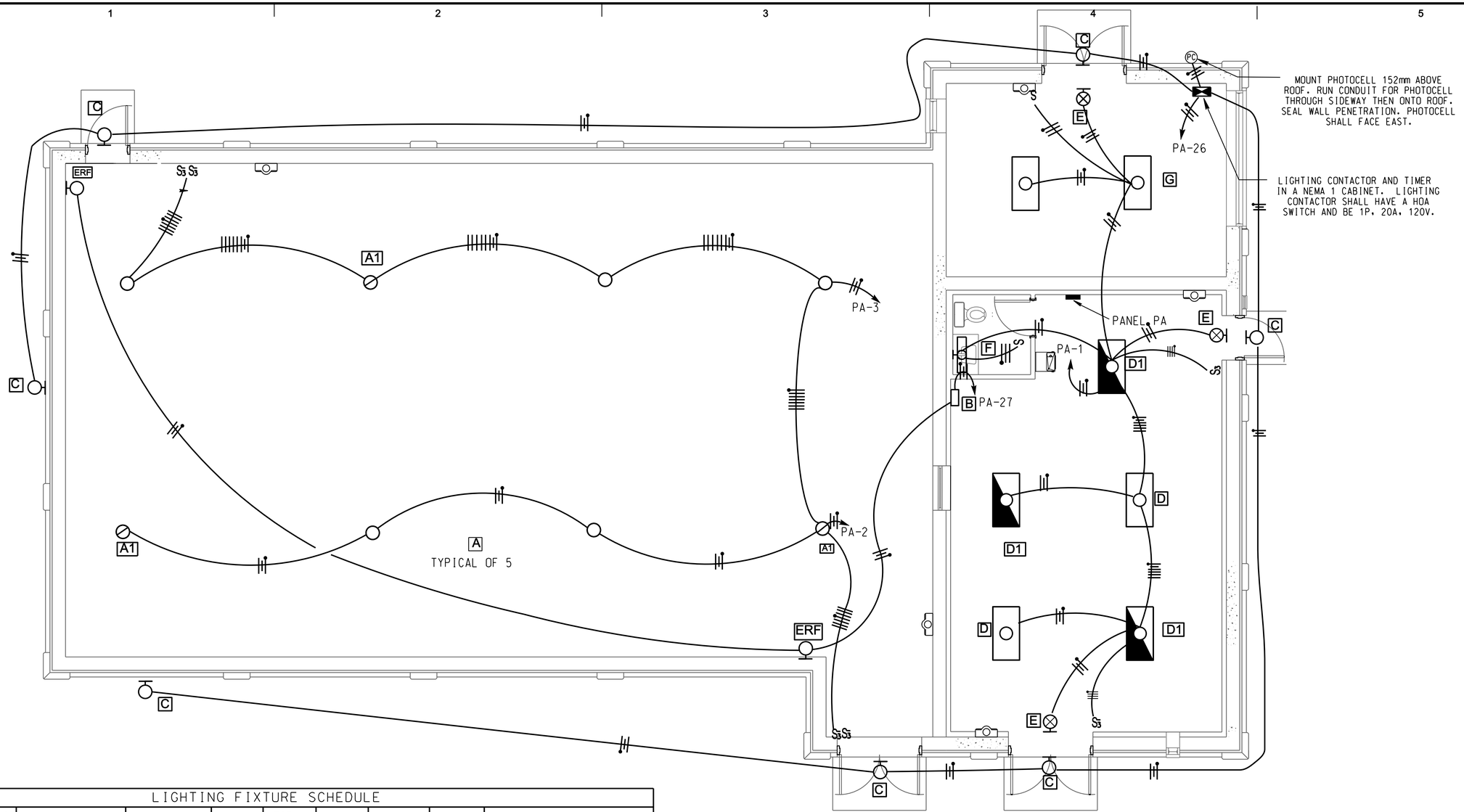

LIGHTING FIXTURE SCHEDULE

CONTRACT DRAWING FIXTURE MARK	DETAIL NAME AND SHEET NUMBER	LAMP ORDERING DESIGNATION OR CODE	NO. AND SIZE OF LAMPS	TOTAL WATTS PER FIXTURE	FIXTURE VOLTAGE	MOUNTING HEIGHT A.F.F.	MOUNTING STYLE	REFERENCE NOTES
A	DETAIL A EL501	METAL HALIDE	1-175	220	120	4880	PENDENT	
A1	DETAIL A EL501	METAL HALIDE /Q150CL	1-175 /150	220/150	120	4880	PENDENT	WITH QUARTZ RESTRIKE
B	DETAIL G EL501	N/A	N/A	N/A	120	2745	SURFACE	SUSTAIN 100W FOR 2 HOURS
C	DETAIL C EL501	LU100	1-100	150	120	2593	SURFACE	MOUNT ABOVE DOOR
D	DETAIL B EL501	F32T8-32W	4-32	200	120	2593	RECESSED	HIGH FREQ. ELECT. BALLASTS
D1	DETAIL B EL501	F32T8-32W	4-32	200	120	2593	RECESSED	WITH BATTERY BACKUP
E	DETAIL F EL501	L.E.D.s	Min 100	10+/-	120	2288	SURFACE	MOUNT ABOVE DOOR
F	DETAIL D EL501	F32T8-32W	1-32	40	120	2288	SURFACE	
G	DETAIL E EL501	F32T8-32W	2-32	100	120	3050	SURFACE	
ERF	DETAIL H EL501	25W - DC	1-25	25	12	2440	SURFACE	MOUNT ON WALL OR COLUMN

FLOOR PLAN

0 1000 2000 MM
SCALE: 1 : 50

NOTES:

1. THE ENTIRE VOLUME OF THE THE FILTER ROOM IN THE FILTER BUILDING SHALL BE CONSIDERED A CLASS 1, DIVISION 1 GROUP D (T2D-215C) HAZARDOUS LOCATION. ALL ELECTRICAL EQUIPMENT INSTALLED WITHIN THE HAZARDOUS AREA SHALL BE SPECIFICALLY APPROVED BY UL OR FACTORY MUTUAL FOR THE ABOVE HAZARDOUS AREA CLASSIFICATION. ELECTRICAL INSTALLATION SHALL BE IN ACCORDANCE WITH THE NEC (NFPA 70) FOR CLASS 1, DIVISION 1, GROUP D HAZARDOUS LOCATIONS.
2. EACH CONDUIT ORIGINATING IN OR PASSING THROUGH OR UNDER A HAZARDOUS AREA AND PENETRATING CONTROL ROOM WALLS, ROOF, OR FLOOR SHALL HAVE EXPLOSION PROOF SEALING FITTINGS INSTALLED IN THE INTERIOR OF THE CONTROL ROOM.
3. ALL METALLIC CONDUITS THAT ARE NOT ATTACHED TO A GROUNDED PANEL OR ENCLOSURE SHALL BE GROUNDED USING A GROUNDED BUSHING.

US ARMY CORPS OF ENGINEERS
OMAHA DISTRICT

MARK	DESCRIPTION	DATE	APPR.

MARK	DESCRIPTION	DATE	APPR.

U. S. ARMY ENGINEER DISTRICT
CORPS OF ENGINEERS
OMAHA, NEBRASKA

DESIGNED BY: KEA | DATE: JULY 2010
DWN BY: SCD | CKD BY: SLO | SOLICITATION NO.: W912BF-0X-X-00XX
SUBMITTED BY: RLA | CONTRACT NO.: W912BF-0X-C-00XX
FILE NAME: 0D40EL101.dwg | FILE NUMBER: X
SIZE: 841x559 | PLOT SCALE: 25 / in. | PLOT DATE: 6/30/2010

DOD, CUTN'COVER STANDARDS
FILTER BUILDING

LIGHTING PLAN

SHEET IDENTIFICATION NUMBER
EL101

i:\dwgs\elec\0D40EL101.dwg
g6edx.jec

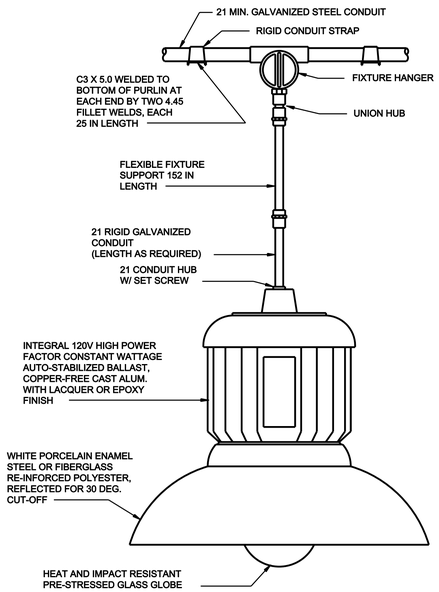

DETAIL A

FIXTURE TYPE "A" AND "A1" MOUNTING DETAIL

NO SCALE

NOTES:

1. LUMINAIRE SHALL COMPLY WITH UL 844 FOR CLASS I, DIVISION I, GROUP D (T2D-215 C) HAZARDOUS LOCATIONS.
2. ALL JOINTS SHALL BE THREADED TYPE.
3. FIXTURE SHALL HAVE INTERNAL PROVISIONS FOR GROUNDING.
4. FIXTURE "A1" SHALL HAVE AN ADDITIONAL 150W QUARTZ HOT RESTRIKE CAPABILITY.

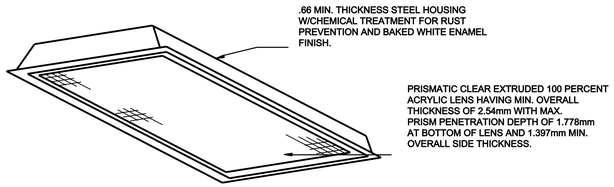

DETAIL B

FIXTURE TYPE "D" & "D1"

NO SCALE

NOTES:

1. HOUSING SHALL BE COLD ROLLED STEEL, FLANGE TO COORDINATE WITH CEILING; EXTRUDED ALUMINUM LENS FRAME, HINGED REMOVAL AND SPRING LOADED CATCHES
2. THE LENS SHALL BE AN ACRYLIC PRISMATIC LENS.
4. BALLAST SHALL BE UL LISTED, CLASS P, WITH SOUND RATING OF "A".
5. FIXTURE SHALL HAVE INTERNAL PROVISIONS FOR GROUNDING.
6. FIXTURE D1 IS THE SAME AS D EXCEPT THAT IT INCLUDES BATTERY BACKUP.

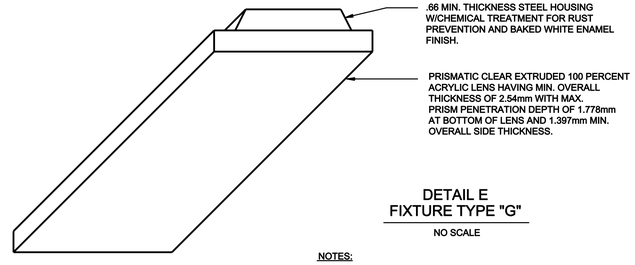

DETAIL E

FIXTURE TYPE "G"

NO SCALE

NOTES:

1. ENTIRE HOUSING SHALL BE PAINTED WHITE. HOUSING SHALL NOT PERMANENTLY DEFORM NOR SHALL IT DEFLECT MORE THAN 1" WHEN LIFTED BY ONE CORNER.
2. HOUSING ENDS SHALL BE SECURED BY RIVETS OR SCREWS. PROVIDE A KNOCKOUT IN EACH END AND TWO IN THE TOP OF HOUSING.
3. THE LENS SHALL FORM A 5-SIDED BASKET WITH WELDED END PLATES. LENS SHALL HAVE HINGE ALONG ENTIRE LENGTH OF FIXTURE AND SHALL BE LIFT AND SHIFT TYPE.
4. BALLAST SHALL BE UL LISTED, CLASS P, WITH SOUND RATING OF "A".
5. FIXTURE SHALL HAVE INTERNAL PROVISIONS FOR GROUNDING.

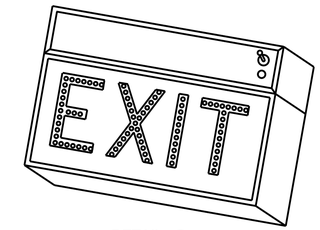

DETAIL F

FIXTURE TYPE "E"

NO SCALE

NOTES:

1. FIXTURE SHALL CONFORM TO UL 924 & NFPA 101.
2. HOUSING SHALL BE ALUMINUM OR STEEL.
3. FIXTURE SHALL HAVE MIN. OF 100 LIGHT EMITTING DIODES.
4. FACE PANEL SHALL BE MOLDED POLYCARBONATE PLASTIC OR GLASS, SHALL BE OF THE WHITE DIFFUSING TYPE SIMILAR TO OPAL OR ALBALITE, AND SHALL HAVE 152mm GREEN LETTERS WITH 19.1mm STROKE.
5. FIXTURE SHALL BE WALL MOUNTED.
6. FIXTURE SHALL HAVE AN AUTOMATIC SOLID STATE CHARGER AND A SEALED, RECHARGEABLE, MAINTENANCE FREE LEAD OXIDE OR NICKEL CADMIUM BATTERY. FIXTURE SHALL HAVE A LIGHT EMITTING DIODE PILOT LIGHT TO SHOW THAT THE BATTERY CHARGER IS FUNCTIONING. A TEST SWITCH TO SIMULATE A POWER FAILURE AND ALLOW CHECKING OF EMERGENCY BATTERY SYSTEM SHALL BE PROVIDED.
7. FIXTURE SHALL BE PREWIRED.

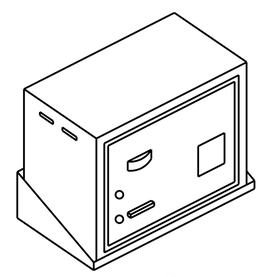

DETAIL G

FIXTURE TYPE "B"

NO SCALE

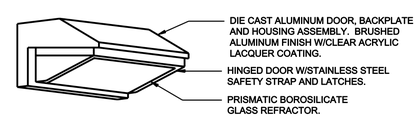

DETAIL C

FIXTURE TYPE "C"

NO SCALE

NOTES:

1. PROVIDE ANODIZED ALUMINIM REFLECTOR AND ADJUSTABLE MOGUL BASE GLAZED PORCELAN LAMPHOLDER, PREWIRED.
2. PROVIDE CAST KNOCKOUTS FOR RECESSED BOX MOUNTING.
3. FIXTURE SHALL HAVE INTERNAL PROVISIONS FOR GROUNDING.
4. FIXTURE SHALL CONFORM TO UL 1572 AND FOR WET LOCATIONS.
5. PROVIDE 120V HIGH POWER TYPE BALLAST FOR OPERATION AT AMBIENT TEMPERATURES FROM MINUS 29 DEGREES TO 41 DEGREES C.

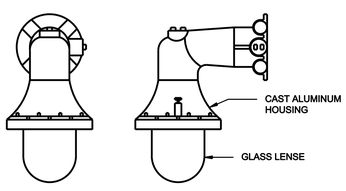

DETAIL H

FIXTURE TYPE "ERF"

NO SCALE

NOTES:

1. FIXTURE SHALL COMPLY WITH UL 844 AND CONTAIN 1-25W, 12V LAMP.

12 VOLT EMERGENCY BATTERY POWER SUPPLY UNIT

THE UNIT SHALL CONFORM TO UL 924, AND SHALL MEET OR EXCEED THE NFPA 70 TIME AND VOLTAGE REQUIREMENTS. THE UNIT SHALL BE DUAL-RATED FOR USE ON EITHER 120-VOLT OR 277-VOLT ALTERNATING CURRENT POWER SUPPLIES. FOLLOWING SUSTAINED LOSS OF THE NORMAL POWER SUPPLY, THE UNIT SHALL BE CAPABLE OF AUTOMATICALLY AND INSTANTANEOUSLY SUPPLYING AT LEAST 125 PERCENT OF THE FULL LOAD CURRENT OF THE QUANTITY AND WATTAGE RATING OF REMOTELY-MOUNTED FLOODLIGHTS INDICATED ON APPLICABLE CONTRACT DOCUMENTS. IT SHALL ALSO BE CAPABLE OF SUPPLYING 125 PERCENT OF THE FULL LOAD CURRENT OF THE FLOODLIGHTS FOR A PERIOD OF NOT LESS THAN 90 MINUTES, AND UNTIL THE BATTERY HAS BEEN DISCHARGED TO 87.5 PERCENT OF THE NOMINAL VOLTAGE RATING OF THE FLOODLIGHTS. A BATTERY LOW-VOLTAGE CUTOUT OR DISCONNECT FEATURE SHALL BE INCORPORATED INTO THE UNIT TO PROTECT THE BATTERY AGAINST DAMAGE IF THE BATTERY VOLTAGE DROPS BELOW 87.5 PERCENT OF THE NOMINAL VOLTAGE RATING OF THE BATTERY FLOODLIGHTS INDICATED ON APPLICABLE CONTRACT DOCUMENTS. THE BATTERY SHALL BE THE SEALED MAINTENANCE-FREE TYPE DESIGNED FOR 10 YEARS OF MAINTENANCE-FREE SERVICE, AND SHALL BE PROVIDED WITH HYDROMETER INDICATORS IF OF THE LEAD-CALCIUM TYPE CONTAINING A SULFURIC ACID ELECTROLYTE. THE BATTERY CHARGER SHALL BE CAPABLE OF FULLY RECHARGING THE BATTERY WITHIN 12 HOURS AFTER DISCHARGE TO 87.5 PERCENT OF THE NOMINAL BATTERY VOLTAGE. THE BATTERY CHARGER SHALL BE THE SOLID-STATE TYPE, AND SHALL PROVIDE A CONTINUOUS, VARIABLE, CURRENT-LIMITED, FILTERED AND REGULATED CHARGE RATE. BATTERY AND CHARGER SHALL BE CONTAINED IN A STEEL CABINET NOT LESS THAN 18 GUAGE IN THICKNESS WITH AN ENAMEL FINISH, UNLESS OTHERWISE APPROVED, AND SHALL HAVE AN ELECTROLYTE-RESISTANT UNDERCOAT IF A CORROSIVE ELECTROLYTE IS HOUSED IN THE BATTERY CASE. MOUNTING BRACKETS OR A MOUNTING SHELF SHALL BE PROVIDED FOR THE CABINET, COMPLETE WITH MOUNTING HARDWARE FINISHED TO MATCH THE CABINET. MOUNTING SLOTS FOR WALL OR SHELF MOUNTING SHALL BE PROVIDED, AS INDICATED ON APPLICABLE CONTRACT DOCUMENTS. THE CABINET SHALL HAVE SEPARATE BATTERY AND BATTERY-CHARGER COMPARTMENTS TO FACILITATE REMOVAL AND REPLACEMENT OF THOSE COMPONENTS, A HINGED ACCESS DOOR, AND PROVISIONS FOR TERMINATING AC AND DC CONDUCTORS AND CONDUITS. A LOAD RELAY WITH 30-AMPERE CONTACTS SHALL BE PROVIDED IN ADDITION TO THE NUMBER OF 10-20 AMPERE DISTRIBUTION CIRCUITS AS NECESSARY TO SUPPLY 125 PERCENT OF THE LOAD DEMANDS OF THE QUANTITY AND RATING OF THE REMOTELY-MOUNTED FLOODLIGHTS. THE UNIT SHALL BE PREWIRED AND SHALL BE EQUIPPED WITH A CHARGE-INDICATOR LIGHT, AND A PUSH-TO-TEST SWITCH AND SUITABLE METER TO INDICATE THE BATTERY VOLTAGE WHEN THE SWITCH IS CLOSED.

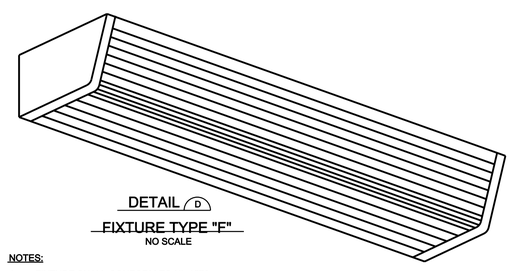

DETAIL D

FIXTURE TYPE "F"

NO SCALE

NOTES:

1. FIXTURE SHALL CONFORM TO UL 1570.
2. HOUSING SHALL BE OF DIE FORMED COLD ROLLED STEEL HAVING A MONIMAL THICKNESS OF NOT LESS THAN 0.762 MILLIMETER. THE BACK HOUSING SHALL BE ONE PIECE, SOLID ALONG ITS ENTIRE LENGTH. END PLATES SHALL BE DIE FORMED STEEL AND SHALL BE FASTENED SECURELY TO THE HOUSING IN A MANNER THAT PERMITS NO LIGHT LEAKAGE.
3. ALL METAL PARTS SHALL RECEIVE A RUST INHIBITIVE COATING AND A BAKED WHITE ENAMEL FINISH COAT.

   LENS SHALL BE PRISMATIC, ONE PIECE, 3.175MM NOMINAL THICKNESS, AND 100 PERCENT VIRGIN ACRYLIC. LENS SHALL BE ATTACHED TO THE HOUSING SO THERE IS NO LIGHT LEAKAGE. LENS SHALL BE HELD IN PLACE BY CONCEALED HINGES, BY REINFORCING RIBS ALONG THE EDGES, OR BY RESTING ON THE END PLATES.

   FIXTURE SHALL BE PREWIRED.

US ARMY CORPS OF ENGINEERS
OMAHA DISTRICT

MARK	DESCRIPTION	DATE	APPR.

MARK	DESCRIPTION	DATE	APPR.

U. S. ARMY ENGINEER DISTRICT
CORPS OF ENGINEERS
OMAHA, NEBRASKA

DESIGNED BY: KEA | DATE: JULY 2010
DWN BY: SCD | CKD BY: SLO | SOLICITATION NO.: W912BF-0X-X-003X
SUBMITTED BY: SLO | CONTRACT NO.: W912BF-0X-C-0XXX
SIZE: 841x559 | FILE NAME: ODA0EL501.dwg | FILE NUMBER: X | PLOT SCALE: 25 / in. | PLOT DATE: 6/28/2010

DOD, CUTNCOVER STANDARDS
FILTER BUILDING

LIGHTING FIXTURE DETAILS

SHEET IDENTIFICATION NUMBER
EL501

I:\dwgs\elec\ODA0EL501.dwg

gfeckkxea

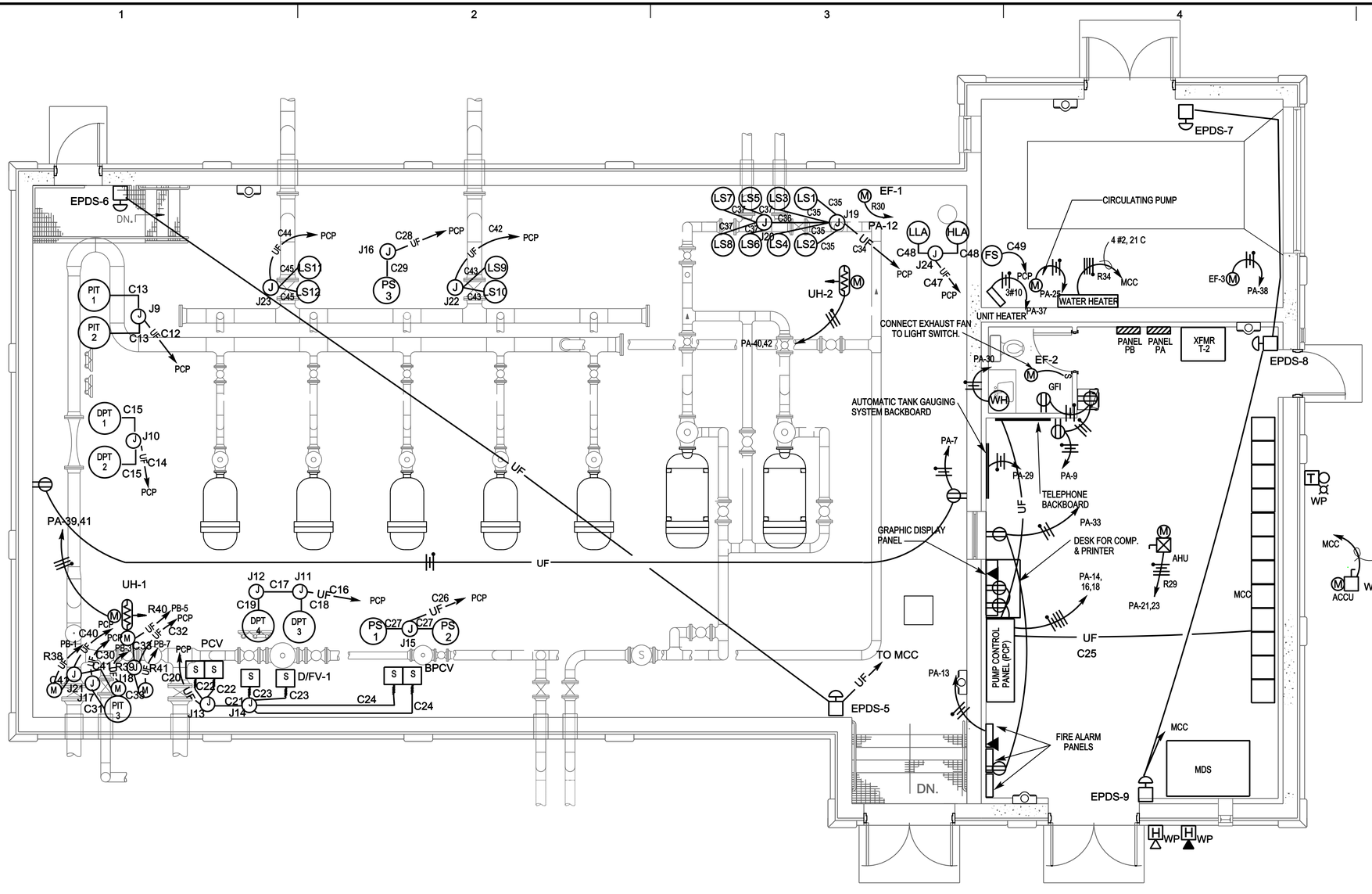

POWER PLAN

0 1000 2000 mm
SCALE: 1 : 50

SUPPLEMENTAL LEGEND:

- VIBRATING HORN, 100dB AT 3.05M
- RESONATING HORN, 100dB AT 3.05M WITH SOUND DISTINCT FROM VIBRATING HORN
- JUMBO MUCHROOM PUSHBUTTON STATION 1-NC MOMENTARY CONTACT, MOUNT AT 1.83M AFF.
- PIT 1 — PRESSURE INDICATING TRANSMITTER
- DPT 1 — DIFFERENTIAL PRESSURE TRANSMITTER
- S — SOLENOID OPERATOR ON VALVE
- J — JUNCTION BOX PER N.E.C.
- R1, C1, J1 — POWER, CONTROL, JUNCTION BOX LABELS PER CONDUIT AND CABLE SCHEDULES ON SHEET E6.01
- T — TELEPHONE SYSTEM BELL/STROBE LIGHT
- EPDS — EMERGENCY POWER DOWN STATION
- FLEXIBLE CONDUIT
- M — 3 KW ELECTRIC UNIT HEATER
- PS 1 — PRESSURE SENSOR
- LS1 — LIMIT SWITCH
- FS — FLOW SWITCH

NOTES:

1. THE ENTIRE VOLUME OF THE THE FILTER ROOM IN THE FILTER BUILDING SHALL BE CONSIDERED A CLASS 1, DIVISION 1 GROUP D (T2D-215C) HAZARDOUS LOCATION. ALL ELECTRICAL EQUIPMENT INSTALLED WITHIN THE HAZARDOUS AREA SHALL BE SPECIFICALLY APPROVED BY UL OR FACTORY MUTUAL FOR THE ABOVE HAZARDOUS AREA CLASSIFICATION. ELECTRICAL INSTALLATION SHALL BE IN ACCORDANCE WITH THE NEC (NFPA 70) FOR CLASS 1, DIVISION 1, GROUP D HAZARDOUS LOCATIONS.
2. EACH CONDUIT ORIGINATING IN OR PASSING THROUGH OR UNDER A HAZARDOUS AREA AND PENETRATING CONTROL ROOM WALLS, ROOF, OR FLOOR SHALL HAVE EXPLOSION PROOF SEALING FITTINGS INSTALLED IN THE INTERIOR OF THE CONTROL ROOM.
3. ALL METALLIC CONDUITS THAT ARE NOT ATTACHED TO A GROUNDED PANEL OR ENCLOSURE SHALL BE GROUNDED USING A GROUNDED BUSHING.
4. A MEANS SHALL BE PROVIDED FOR THE FUTURE REMOVAL OF EQUIPMENT WITHOUT THE TURNING OR REMOVAL OF CONDUIT IN HAZARDOUS LOCATIONS. THIS MAY BE ACCOMPLISHED BY THE INSTALLATION OF AN APPROPRIATE EXPLOSION PROOF UNION AT OR NEAR THE CONDUIT ENTRANCE TO THE ENCLOSURE. UNION SHALL BE RATED FOR THE HAZARDOUS CLASSIFICATION LISTED ABOVE.

US ARMY CORPS OF ENGINEERS
OMAHA DISTRICT

MARK	DESCRIPTION	DATE	APPR.

MARK	DESCRIPTION	DATE	APPR.

DESIGNED BY: KEA
DWN BY: SCD
CKD BY: SLO
SUBMITTED BY: RLS
FILE NAME: OD40EP101.dwg
SIZE: 841x559
PLOT SCALE: 25 / in.
DATE: JULY 2010
SOLICITATION NO.: W9128F-0X-X-00XX
CONTRACT NO.: W9128F-0X-C-00XX
FILE NUMBER: X
PLOT DATE: 7/1/2010

U. S. ARMY ENGINEER DISTRICT
CORPS OF ENGINEERS
OMAHA, NEBRASKA

DOD, CUTN'COVER STANDARDS
FILTER BUILDING

POWER PLAN

SHEET IDENTIFICATION NUMBER
EP101

J:\dwgs\elec\OD40EP101.dwg
g6edxjec

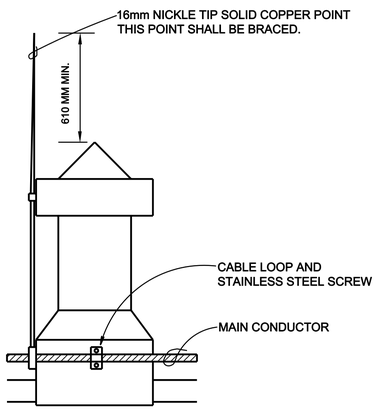

AIR TERMINAL MOUNTING ON VENTILATOR
NO SCALE

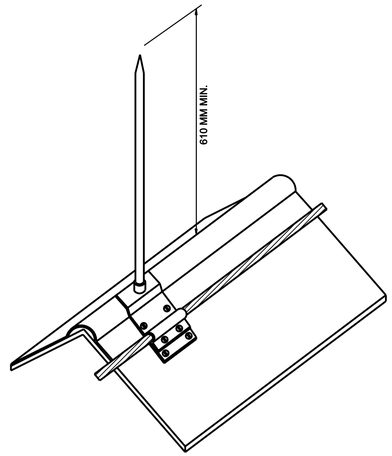

LIGHTNING PROTECTION POINT
SLOPED MOUNTING DETAIL
NO SCALE
1 EG101 EP501

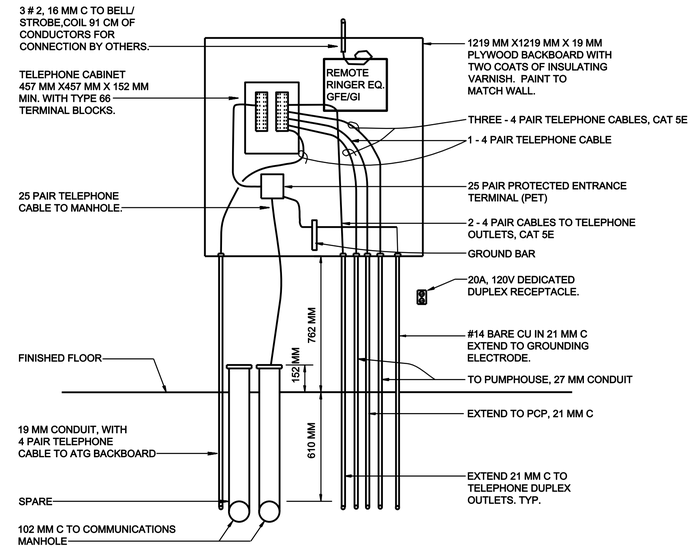

TELEPHONE BACKBOARD ELEVATION
NO SCALE

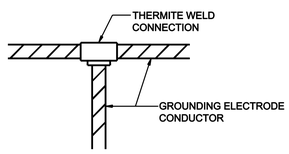

CABLE-TO-CABLE
GROUNDING CONNECTION DETAIL
NO SCALE
2 EG101 EP501

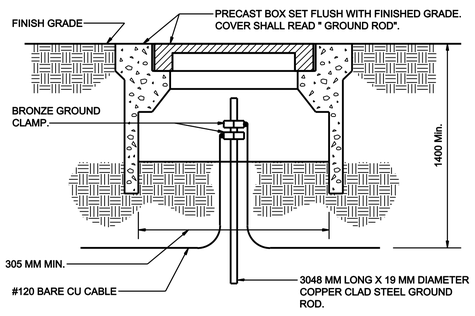

GROUND ROD BOX DETAIL
NO SCALE
3 EG101 EP501

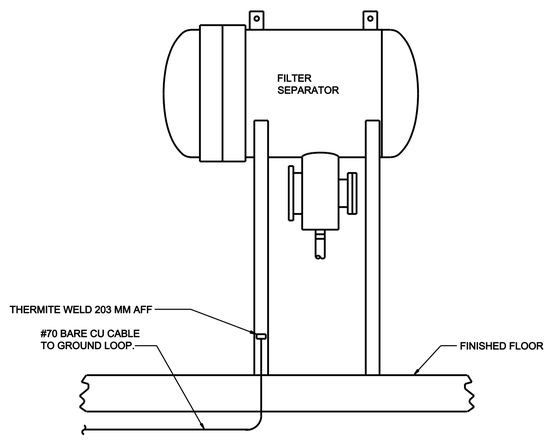

FILTER SEPARATOR GROUNDING DETAIL
NO SCALE
6 EG101 EP501

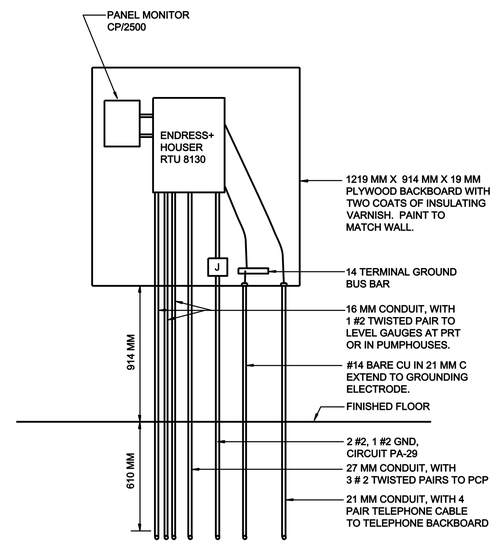

THE RTU AND PANEL MONITOR ARE PROVIDED BY
SPEC. SECT. 33 52 43.11. ALL CONDUIT FOR ATG SYSTEM SHALL BE RIGID
STEEL, (GALVANIZED ABOVEGROUND AND PVC COATED UNDERGROUND).
THE ATG SYSTEM SHALL BE ENRAF 854 TYPE.

AUTOMATIC TANK GAUGING SYSTEM
BACKBOARD ELEVATION
NO SCALE

US ARMY CORPS
OF ENGINEERS
OMAHA DISTRICT

MARK	DESCRIPTION	DATE	APPR.

MARK	DESCRIPTION	DATE	APPR.

DATE: JULY 2010
SOLICITATION NO.: W912BF-0X-X-00XX
CONTRACT NO.: W912BF-0X-C-00XX
FILE NUMBER: X
PLOT DATE: 7/1/2010
DESIGNED BY: KEA
DWN BY: SCD
CKD BY: SLO
SUBMITTED BY: RLE
FILE NAME: OD4IEP501.dwg
PLOT SCALE: 25 / in.
SIZE: 841x559

U. S. ARMY ENGINEER DISTRICT
CORPS OF ENGINEERS
OMAHA, NEBRASKA

DOD, CUTN'COVER STANDARDS
FILTER BUILDING

ELECTRICAL DETAILS

SHEET
IDENTIFICATION
NUMBER
EP501

I:\dwgs\elec\OD4IEP501.dwg
gfeobjec

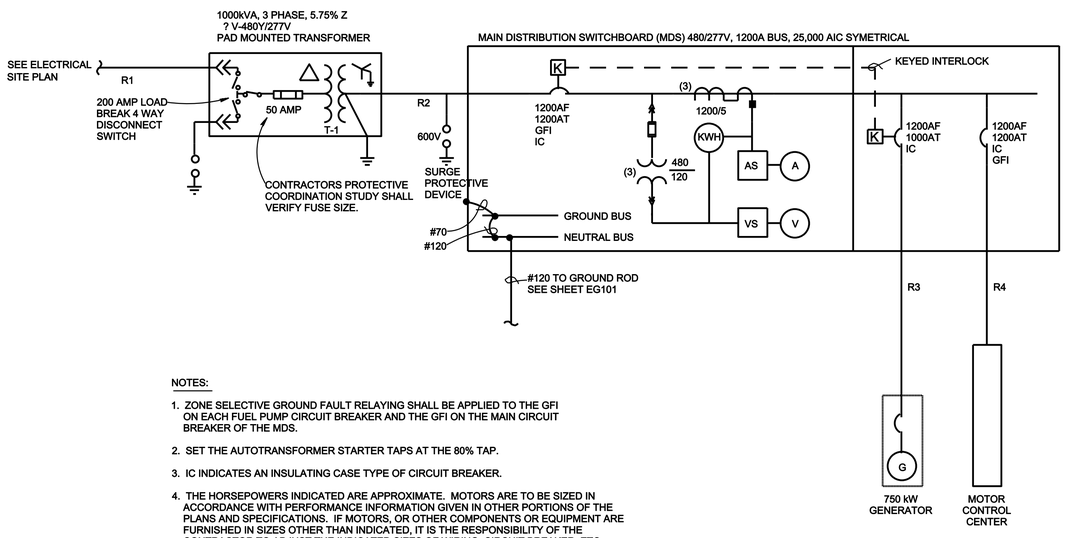

NOTES:

1. ZONE SELECTIVE GROUND FAULT RELAYING SHALL BE APPLIED TO THE GFI ON EACH FUEL PUMP CIRCUIT BREAKER AND THE GFI ON THE MAIN CIRCUIT BREAKER OF THE MDS.
2. SET THE AUTOTRANSFORMER STARTER TAPS AT THE 80% TAP.
3. IC INDICATES AN INSULATING CASE TYPE OF CIRCUIT BREAKER.
4. THE HORSEPOWERS INDICATED ARE APPROXIMATE. MOTORS ARE TO BE SIZED IN ACCORDANCE WITH PERFORMANCE INFORMATION GIVEN IN OTHER PORTIONS OF THE PLANS AND SPECIFICATIONS. IF MOTORS, OR OTHER COMPONENTS OR EQUIPMENT ARE FURNISHED IN SIZES OTHER THAN INDICATED, IT IS THE RESPONSIBILITY OF THE CONTRACTOR TO ADJUST THE INDICATED SIZES OF WIRING, CIRCUIT BREAKER, ETC. AND TO RECIRCUIT IF NECESSARY AT NO ADDITIONAL COST TO THE GOVERNMENT.
5. CONTRACTOR SHALL SUPPLY CAPACITORS OF THE SIZE RECCOMENDED BY THE MANUFACTURES FOR MOTORS INDICATED TO HAVE CAPACITORS.

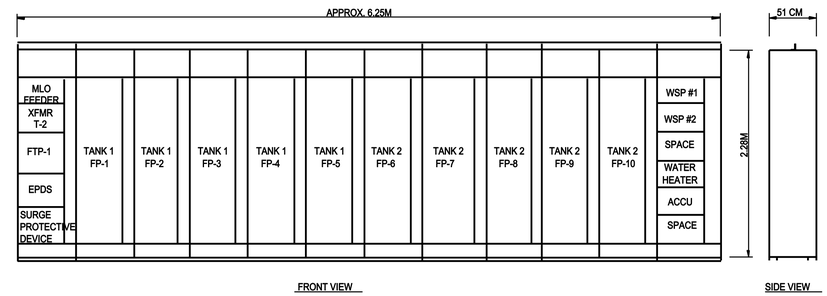

MOTOR CONTROL CENTER (MCC) ELEVATION

NO SCALE

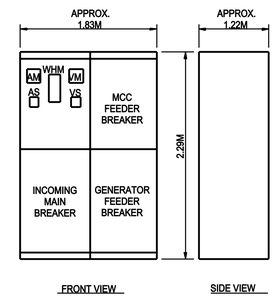

MAIN DISTRIBUTION SWITCHBOARD (MDS)

NO SCALE

NOTES:

1. SEE CONDUIT AND CABLE SCHEDULES ON SHEET EP603.

NOTES TO DESIGNER:

1. TRANSFORMERS, SWITCHGEAR, MOTOR CONTROL CENTER, FUSES, CIRCUIT BREAKERS, AND CONDUCTORS SHALL HAVE RATINGS APPROPRIATE FOR THE ACTUAL LOADS AND FOR THE CHARACTERISTICS OF THE PRIMARY SERVICE. SWITCHGEAR, MOTOR CONTROL CENTER, AND BREAKERS SHALL HAVE SHORT CIRCUIT RATINGS BASED ON ACTUAL LOADS, AVAILABLE SHORT CIRCUIT CURRENT, AND EQUIPMENT RATINGS.
2. ENGINE GENERATOR SIZE SHALL BE BASED ON THE ABILITY TO START ONE PUMP WITH NO MORE THAN A 20% VOLTAGE DIP WITH A 50KVA LOAD ON PANEL PA AND THREE OTHER PUMPS RUNNING. GENERATOR SHALL BE ABLE TO RUN FOUR PUMPS.
3. SOLID STATE MOTOR STARTERS MAY BE USED INSTEAD OF AUTOTRANSFORMER TYPE WITH APPROVAL OF THE COMMAND FUELS ENGINEER.
4. KIRK KEY INTERLOCK SYSTEM USED ON MAIN AND GENERATOR CIRCUIT BREAKER TO INSURE BOTH AREN'T CLOSED AT THE SAME TIME.

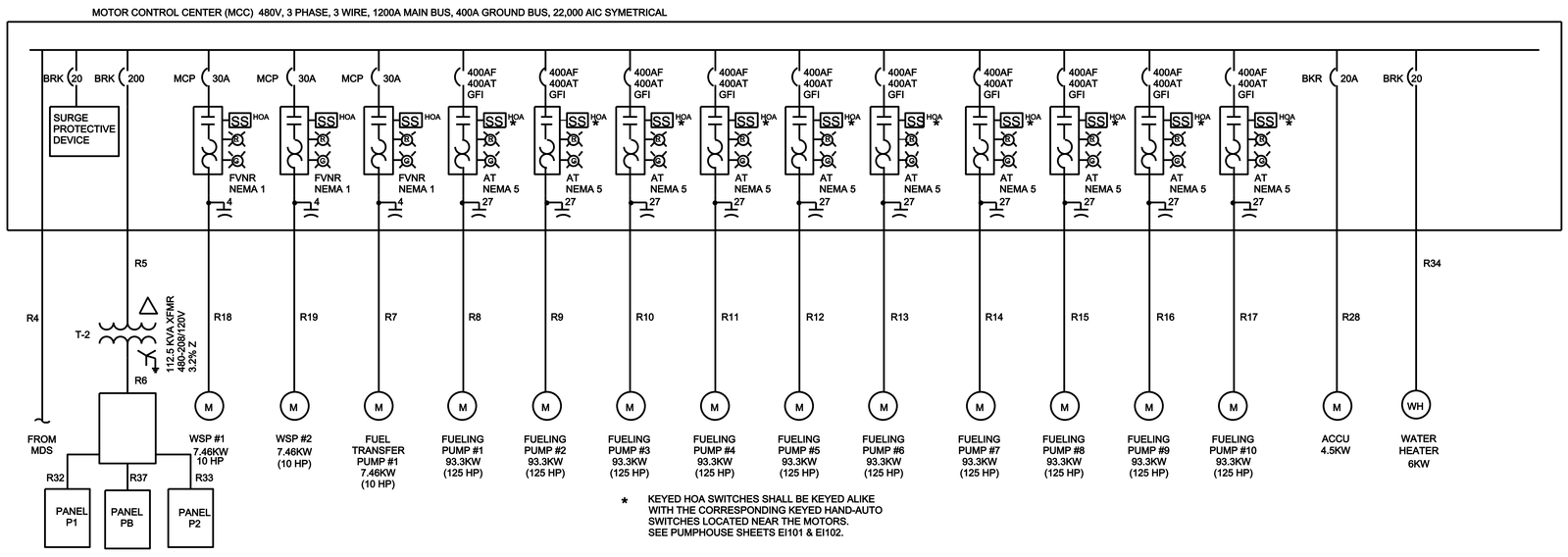

* KEYED HOA SWITCHES SHALL BE KEYED ALIKE WITH THE CORRESPONDING KEYED HAND-AUTO SWITCHES LOCATED NEAR THE MOTORS. SEE PUMPHOUSE SHEETS EI101 & EI102.

US ARMY CORPS OF ENGINEERS
OMAHA DISTRICT

MARK	DESCRIPTION	DATE	APPR.

MARK	DESCRIPTION	DATE	APPR.

U. S. ARMY ENGINEER DISTRICT
CORPS OF ENGINEERS
OMAHA, NEBRASKA

DESIGNED BY: KEA | DATE: JULY 2010
DWN BY: SCD | CKD BY: SLO | SOLICITATION NO.: W912BF-0X-X-0XXX
SUBMITTED BY: RLS | CONTRACT NO.: W912BF-0X-C-0XXX
FILE NAME: ODMDEP601.dwg | FILE NUMBER: X
SIZE: 841x559 | PLOT SCALE: 25 / in. | PLOT DATE: 8/28/2010

DOD, CUTN'COVER STANDARDS
FILTER BUILDING

ONE-LINE DIAGRAM

SHEET IDENTIFICATION NUMBER
EP601

I:\dwg\elec\ODMDEP601.dwg
gfedcbkea

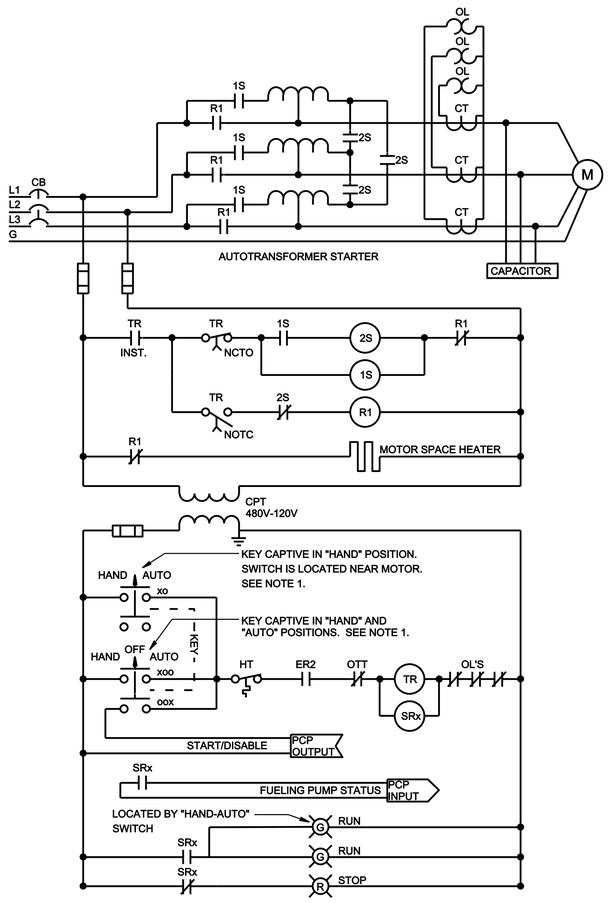

TYPICAL FUELING PUMP (FP-x)

x = 1 FOR FP-1
x = 2 FOR FP-2
x = 3 FOR FP-3
x = 4 FOR FP-4
x = 5 FOR FP-5
x = 6 FOR FP-6
x = 7 FOR FP-7
x = 8 FOR FP-8
x = 9 FOR FP-9
x = 10 FOR FP-10

NOTES:

1. KEYED LOCKS FOR LOCAL HAND-AUTO SWITCHES AND CORRESPONDING MCC HOA SWITCHES SHALL BE KEYED ALIKE. KEYED LOCKS FOR HAND-AUTO SWITCHES AND NON-CORRESPONDING MCC HOA SWITCHES SHALL NOT BE KEYED ALIKE.

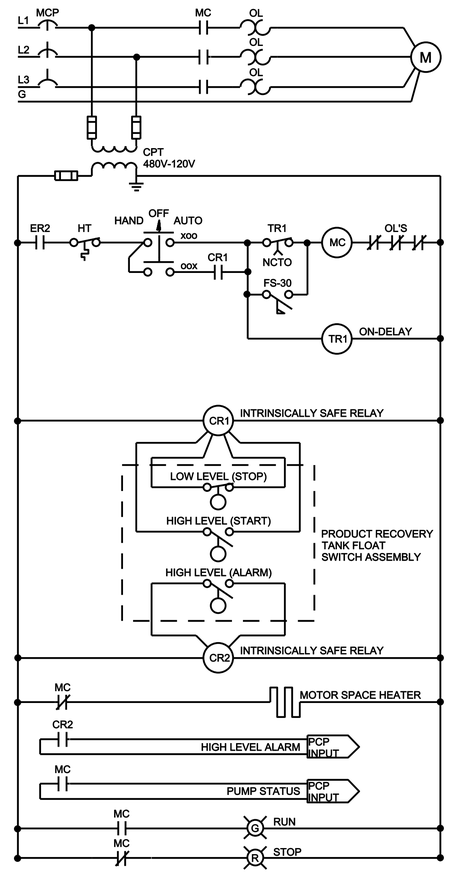

FUELING TRANSFER PUMP (FTP-1)

LOCATED AT PRODUCT RECOVERY TANK

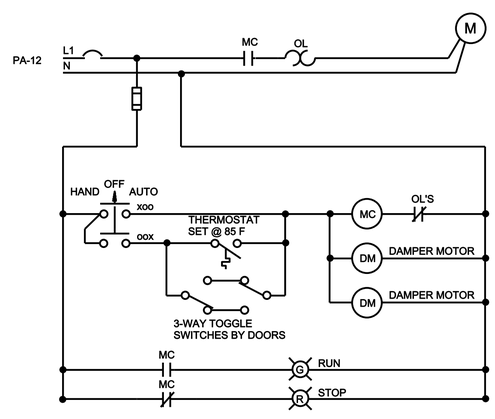

FILTER ROOM EXHAUST FAN

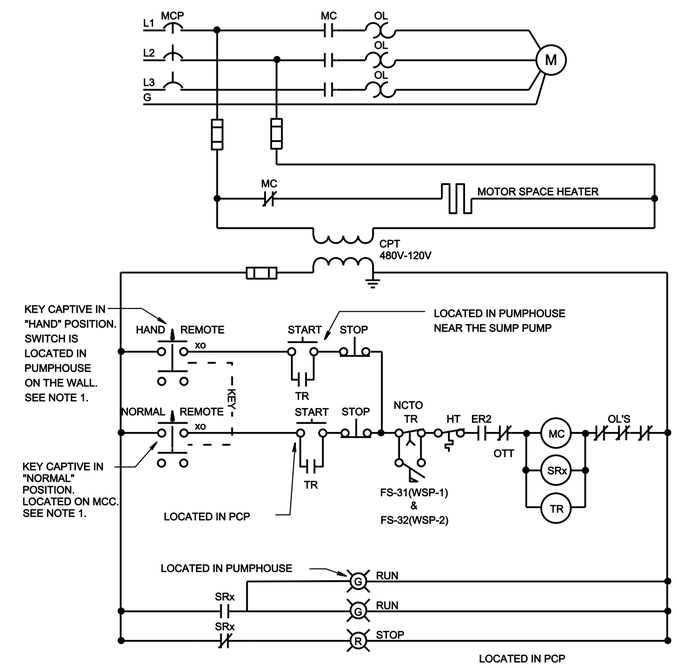

TYPICAL WATER SUMP PUMP (WSP-x)

x = 1 FOR WSP-1
x = 2 FOR WSP-2

NOTES:

1. MOTOR STARTER IN MCC WILL HAVE A KEYED (NORMAL, REMOTE) SWITCH KEY INTERLOCKED WITH THE CORRESPONDING (HAND, REMOTE) SWITCH LOCATED IN THE PUMPHOUSE. SEE SHEETS EP601AND PUMPHOUSE SHEETS EI101 & EI102.

SUPPLEMENTAL LEGEND:

CR CONTROL RELAY
DM DAMPER MOTOR
ER EMERGENCY/SAFTEY SYSTEM RELAY
HT MOTOR HIGH TEMPERATURE
MC MOTOR CONTROLLER
OTT OVER TEMPERATURE THERMOSTAT ON AUTOTRANSFORMER
SR STATUS RELAY
TR TIMER RELAY
EPDS EMERGENCY POWER DOWN STATION
PCP PUMP CONTROL PANEL
FCC FUELS CONTROL CENTER
ESO EMERGENCY SHUTOFF VALVE

US ARMY CORPS OF ENGINEERS
OMAHA DISTRICT

MARK	DESCRIPTION	DATE	APPR.

MARK	DESCRIPTION	DATE	APPR.

DESIGNED BY: KEA
DWN BY: SCD
CKD BY: SLO
SUBMITTED BY: RLL
DATE: JULY 2010
SOLICITATION NO.: W912BF-0X-X-0XXX
CONTRACT NO.: W912BF-0X-C-0XXX
FILE NUMBER: x
FILE NAME: ODI4GEP602.dwg
SIZE: 841x559
PLOT SCALE: 25 / in.
PLOT DATE: 8/28/2010

U. S. ARMY ENGINEER DISTRICT
CORPS OF ENGINEERS
OMAHA, NEBRASKA

DOD, CUTN'COVER STANDARDS
FILTER BUILDING

WIRING DIAGRAMS

SHEET IDENTIFICATION NUMBER
EP602

I:\dwgs\elec\ODI4GEP602.dwg
gfedcbkea

PANEL SCHEDULE: PANEL PA

ENCLOSURE: NEMA 1 — WIRING: 3-Phase 4 Wire
MOUNTING: Surface — VOLTAGE: 208.00/ 120.09
OC DEVICE TYPE: Breaker — BUS CONTINUOUS RATING(A): 400.00
DEVICE FAMILY: Bolt On — WITHSTAND RATING(A): 14000.0
NOTES: 350 AMP MAIN BREAKER

Ck	Description	Connected kVA	OC Amps	OC P		OC Amps	OC P	Connected kVA	Description	Ck
1	LIGHTS & EF-2	1.6	20	1	A	20	1	1.54	LIGHTS	2
3	LIGHTS	1.54	20	1	B	50	3	5	PANEL P1	4
5	WA RM PU	0.54	20	1	C	""		5	""	6
7	RECEPTACLE	0.54	20	1	A	""		5	""	8
9	RECEPTACLE	1.2	20	1	B	20	1	1	GEN BAT CHARGE	10
11	SAFETY CIRCUIT	0.5	20	1	C	40	1	2.30	EF-1 (1.5)	12
13	FIRE ALARM	0.5	20	1	A	20	1	1	PCP CNRL POWER	14
15	PANEL P2	5	50	3	B	20	1	1	PCP CNRL POWER	16
17	""	5	""		C	20	1	1	PCP CNRL POWER	18
19	""	5	""		A	20	2	1	GEN JACKET HEA	20
21	AHU	3.46	40	2	B		""	1	""	22
23	""	3.46	""		C	20	1	.5	PR TANK LEAK	24
25	CIR. PUMP	0.25	20		A	20	1	1.2	EXT LIGHTS	26
27	EM LIGHTS	0.8	20	1	B	20	1	1	SPARE	28
29	ATG	0.5	20	1	C	30	1	3	WATER HEATER	30
31	SPARE	1	20	1	A	50	3	5	PANEL PB	32
33	RECP.	1	20	1	B			5	PANEL PB	34
35	SPARE	1	20	1	C			5	PANEL PB	36
37	UNIT HEATER	3	30	1	A	20	1	1.86	EF-3	38
39	UH-1	4.56	50	2	B	50	2	4.56	UH-2	40
41	""	4.56	""		C	""		4.56	""	42

PANEL SCHEDULE: PANEL PB

ENCLOSURE: NEMA 1 — WIRING: 3-Phase 4 Wire
MOUNTING: Surface — VOLTAGE: 208.00/ 120.09
OC DEVICE TYPE: Breaker — BUS CONTINUOUS RATING(A): 100.00
DEVICE FAMILY: Bolt On — WITHSTAND RATING(A): 10000.0
NOTES: 50 AMP MAIN BREAKER

Ck	Description	Connected kVA	OC Amps	OC P		OC Amps	OC P	Connected kVA	Description	Ck
1	MOV	1	20	1	A	20	1	0.5	GndPrvg/Ovrfl Pnl	2
3	MOV	1	20	1	B	20	1	1	SPARE	4
5	MOV	1	20	1	C	20	1	1	SPARE	6
7	MOV	1	20	1	A	20	1	1	SPARE	8
9	SPARE	1	20	1	B	20	1	1	SPARE	10
11	SPARE	1	20	1	C	20	1	1	SPARE	12
13	SPACE			1	A		1		SPACE	14
15	SPACE			1	B		1		SPACE	16
17	SPACE			1	C		1		SPACE	18
19	SPACE			1	A		1		SPACE	20
21	SPACE			1	B		1		SPACE	22
23	SPACE			1	C		1		SPACE	24

CONDUIT AND CABLE SCHEDULE (CONTROL)

CKT NO	CIRCUIT FROM	CIRCUIT TO	CONDUIT QTY	CONDUIT SIZE	CONDUCTORS QTY	CONDUCTORS SIZE	GND	TYPE	NOTES
C1	PCP	J1	1	27MM	26	2.5		TW	INCLUDES 4 SPARES
C2	J1	FS-1,-2,-3,-4,&-5	1	16MM	4	2.5		TW	
C3	J4	ESO-1,-2,-3,-4,&-5	1	16MM	4	2.5		TW	
C4	J3	FS-11	1	16MM	4	2.5		TW	INCLUDES 2 SPARES
C5	J3	J4	1	27MM	14	2.5		TW	INCLUDES 4 SPARES
C6	PCP	J5	1	27MM	26	2.5		TW	INCLUDES 4 SPARES
C7	J5	FS-6,-7,-8,-9,&-10	1	16MM	4	2.5		TW	
C8	J8	ESO-6,-7,-8,-9,&-10	1	16MM	4	2.5		TW	
C9	J7	FS-12	1	16MM	4	2.5		TW	INCLUDES 2 SPARES
C10	J7	J8	1	27MM	14	2.5		TW	INCLUDES 4 SPARES
C11	LEVEL INDICATOR	ATGB	1	16MM	1	2/C 2.5		TC	SHIELDED CABLE
C12	PCP	J9	1	27MM	2	2/C 2.5		TC	SHIELDED CABLE
C13	J9	PIT 1 & 2	1	16MM	1	2/C 2.5		TC	SHIELDED CABLE
C14	PCP	J10	1	27MM	2	2/C 2.5		TC	SHIELDED CABLE
C15	J10	DPT-1 & DPT-2	1	16MM	1	2/C 2.5		TC	SHIELDED CABLE
C16	PCP	J11	1	27MM	2	2/C 2.5		TC	SHIELDED CABLE
C17	J11	J12	1	16MM	1	2/C 2.5		TC	SHIELDED CABLE
C18	J11	DPT-3	1	16MM	1	2/C 2.5		TC	SHIELDED CABLE
C19	J12	DPT-4	1	16MM	1	2/C 2.5		TC	SHIELDED CABLE
C20	PCP	J13	1	27MM	16	2.5		TW	INCLUDES 4 SPARES
C21	J13	J14	1	16MM	10	2.5		TW	INCLUDES 2 SPARES
C22	J13	PCV A&B	1	16MM	2	2.5		TW	
C23	J14	D/FV-1 A & B	1	16MM	2	2.5		TW	
C24	J14	BPCV-1 A&B	1	16MM	2	2.5		TW	
C25	PCP	MCC	1	53MM	50	2.5		TW	CONTROL, INCLUDES SPARES
C26	PCP	J15	1	27MM	2	2/C 2.5		TC	SHIELDED CABLE
C27	J15	PS-1 & PS-2	1	16MM	1	2/C 2.5		TC	SHIELDED CABLE
C28	PCP	J16	1	16MM	1	2/C 2.5		TC	SHIELDED CABLE
C29	J16	PS-3	1	16MM	1	2/C 2.5		TC	SHIELDED CABLE
C30	PCP	J17	1	16MM	1	2/C 2.5		TC	SHIELDED CABLE
C31	J17	PIT 3	1	16MM	1	2/C 2.5		TC	SHIELDED CABLE
C32	PCP	J18	1	27MM	10	2.5		TW	INCLUDES 2 SPARES
C33	J18	MOVs	1	16MM	4	2.5		TW	
C34	PCP	J19	1	27MM	20	2.5		TW	INCLUDES 4 SPARES
C35	J19	LS1 - LS4	1	16MM	2	2.5		TW	
C36	J19	J20	1	27MM	10	2.5		TW	INCLUDES 2 SPARES
C37	J20	LS5 - LS8	1	16MM	2	2.5		TW	
C38	J1	LIQUID SENSOR	1	16MM	2	2.5		TW	
C39	J5	LIQUID SENSOR	1	16MM	2	2.5		TW	
C40	PCP	J21	1	27MM	10	2.5		TW	INCLUDES 2 SPARES
C41	J21	MOVs	1	16MM	4	2.5		TW	
C42	PCP	J22	1	16MM	6	2.5		TW	INCLUDES 2 SPARES
C43	J22	LS9, LS10	1	16MM	2	2.5		TW	
C44	PCP	J23	1	16MM	6	2.5		TW	INCLUDES 2 SPARES
C45	J23	LS11, LS12	1	16MM	2	2.5		TW	
C46	PCP	LEVEL ALARMS	1	16MM	2	2/C 2.5		TC	SHIELDED CABLE
C47	PCP	J24	1	20MM	6	2.5		TW	CONTROL, INCLUDES SPARES
C48	J24	HLA OR LLA	1	16MM	2	2.5		TW	CONTROL
C49	PCP	EYE WASH FLOW SWITCH	1	16MM	2	2.5		TW	

CONDUIT AND CABLE SCHEDULE (POWER)

CKT NO	CIRCUIT FROM	CIRCUIT TO	CONDUIT QTY	CONDUIT SIZE	CONDUCTORS QTY	CONDUCTORS SIZE	GND	TYPE	NOTES
R1	EXISTING MANHOLE	T-1 PRIMARY	2	103MM	3	70 (15kV)		XLP	1 SPARE 103MM CONDUIT
R2	T-1 SECONDARY	MDS	4	103MM	4	185		THWN	POWER
R3	MDS & PANEL PA	GENERATOR	3 1	103MM 27MM	4 8	240 4		THWN TW	POWER CONDUCTORS SEE NOTE #1
R4	MDS	MCC	4	103MM	4	185	35	THWN	POWER
R5	MCC	T-2 PRIMARY	1	53MM	3	95	16	THWN	POWER
R6	T-2 SECONDARY	PANEL PA	2	53MM	4	150	35	THWN	POWER
R7	MCC	FTP-1	1	41MM	3 2 2	6 4 2.5	6	TW TW TW	POWER (MOTOR) POWER (HEATER) CONTROLS
R7A	MCC	FTP-1	1	41MM	6	2.5		TW	CONTROLS
R8	MCC	FP-1	1	63MM	3 2 2	150 4 2.5	35	THWN TW TW	POWER (MOTOR) POWER (HEATER) CONTROLS
R9	MCC	FP-2	1	63MM	3 2 2	150 4 2.5	35	THWN TW TW	POWER (MOTOR) POWER (HEATER) CONTROLS
R10	MCC	FP-3	1	63MM	3 2 2	150 4 2.5	35	THWN TW TW	POWER (MOTOR) POWER (HEATER) CONTROLS
R11	MCC	FP-4	1	63MM	3 2 2	150 4 2.5	35	THWN TW TW	POWER (MOTOR) POWER (HEATER) CONTROLS
R12	MCC	FP-5	1	63MM	3 2 2	150 4 2.5	35	THWN TW TW	POWER (MOTOR) POWER (HEATER) CONTROLS
R13	MCC	FP-6	1	63MM	3 2 2	150 4 2.5	35	THWN TW TW	POWER (MOTOR) POWER (HEATER) CONTROLS
R14	MCC	FP-7	1	63MM	3 2 2	150 4 2.5	35	THWN TW TW	POWER (MOTOR) POWER (HEATER) CONTROLS
R15	MCC	FP-8	1	63MM	3 2 2	150 4 2.5	35	THWN TW TW	POWER (MOTOR) POWER (HEATER) CONTROLS
R16	MCC	FP-9	1	63MM	3 2 2	150 4 2.5	35	THWN TW TW	POWER (MOTOR) POWER (HEATER) CONTROLS
R17	MCC	FP-10	1	63MM	3 2 2	150 4 2.5	35	THWN TW TW	POWER (MOTOR) POWER (HEATER) CONTROLS
R18	MCC	WSP-1	1	21MM	3 2 2	4 4 2.5	4	TW TW TW	POWER (MOTOR) POWER (HEATER) CONTROLS
R19	MCC	WSP-2	1	21MM	3 2 2	4 4 2.5	4	TW TW TW	POWER (MOTOR) POWER (HEATER) CONTROLS
R20	J2	HA SWITCH & LIGHT(P1)	1	16MM	4	2.5		TW	CONTROLS
R21	J3	J2	1	27MM	28	2.5		TW	CONTROLS
R22	MCC	J3	1	53MM	50	2.5		TW	CONTROLS (INCLUDES 6 SPARES)
R23	J3	EPDS (PUMP HOUSE 1)	1	16MM	2	2.5		TW	CONTROLS
R24	J7	J7A	1	27MM	28	2.5		TW	CONTROLS
R25	MCC	J7	1	53MM	50	2.5		TW	CONTROLS(INCLUDES 6 SPARES)
R26	J7	EPDS (PUMP HOUSE 2)	1	16MM	2	2.5		TW	CONTROLS
R27	J7A	HA SWITCH & LIGHT(P2)	1	16MM	4	2.5		TW	CONTROLS
R28	MCC	ACCU	1	21MM	3	4	4	TW	POWER
R29	PANEL PA	AHU	1	21MM	2	10	4	TW	POWER
R30	PANEL PA	FIL SEP RM EF-1	1	21MM	2	10	4	TW	POWER
R31	PCP	LEVEL INDICATORS	1	16MM	2	4	4	TW	POWER
R32	PANEL PA	PANEL P1	1	27MM	4	16	6	TW	SUB FEEDER
R33	PANEL PA	PANEL P2	1	27MM	4	16	6	TW	SUB FEEDER
R34	MCC	WATER HEATER	1	21MM	4	4		TW	POWER
R35	J2	HR SWITCH & LIGHT(P1) AND START/STOP STATION	1	16MM	6	2.5		TW	CONTROLS
R36	J7A	HR SWITCH & LIGHT(P2) AND START/STOP STATION	1	16MM	6	2.5		TW	CONTROLS
R37	PANEL PA	PANEL PB	1	27MM	4	16	6	TW	SUB FEEDER
R38	PANEL PB, CKT. 1	MOV	1	16MM	2	4	4	TW	POWER
R39	PANEL PB, CKT. 3	MOV	1	16MM	2	4	4	TW	POWER
R40	PANEL PB, CKT. 5	MOV	1	16MM	2	4	4	TW	POWER
R41	PANEL PB, CKT. 7	MOV	1	16MM	2	4	4	TW	POWER

NOTES:

1. PROVIDE CONDUCTORS FOR SITE SPECIFIC GENERATOR AUXILLARY EQUIPMENT AS REQUIRED. (E.G., BATTERY CHARGER, LUBE OIL HEATER, GLOW PLUGS, JACKET WATER HEATER, ETC.)

J:\dwgs\elec\OD40EP603.dwg
g6edxjec

US ARMY CORPS OF ENGINEERS
OMAHA DISTRICT

MARK | DESCRIPTION | DATE | APPR.

MARK | DESCRIPTION | DATE | APPR.

DESIGNED BY: KEA
DWN BY: SCD
CKD BY: SLO
SUBMITTED BY: RLS
FILE NAME: OD40EP603.dwg
SIZE: 841x559
PLOT SCALE: 25 / in.
DATE: JULY 2010
SOLICITATION NO.: W9128F-0X-X-00XX
CONTRACT NO.: W9128F-0X-C-00XX
FILE NUMBER: X
PLOT DATE: 7/1/2010

U. S. ARMY ENGINEER DISTRICT
CORPS OF ENGINEERS
OMAHA, NEBRASKA

DOD, CUT'N'COVER STANDARDS
FILTER BUILDING

SCHEDULE SHEET

SHEET IDENTIFICATION NUMBER
EP603

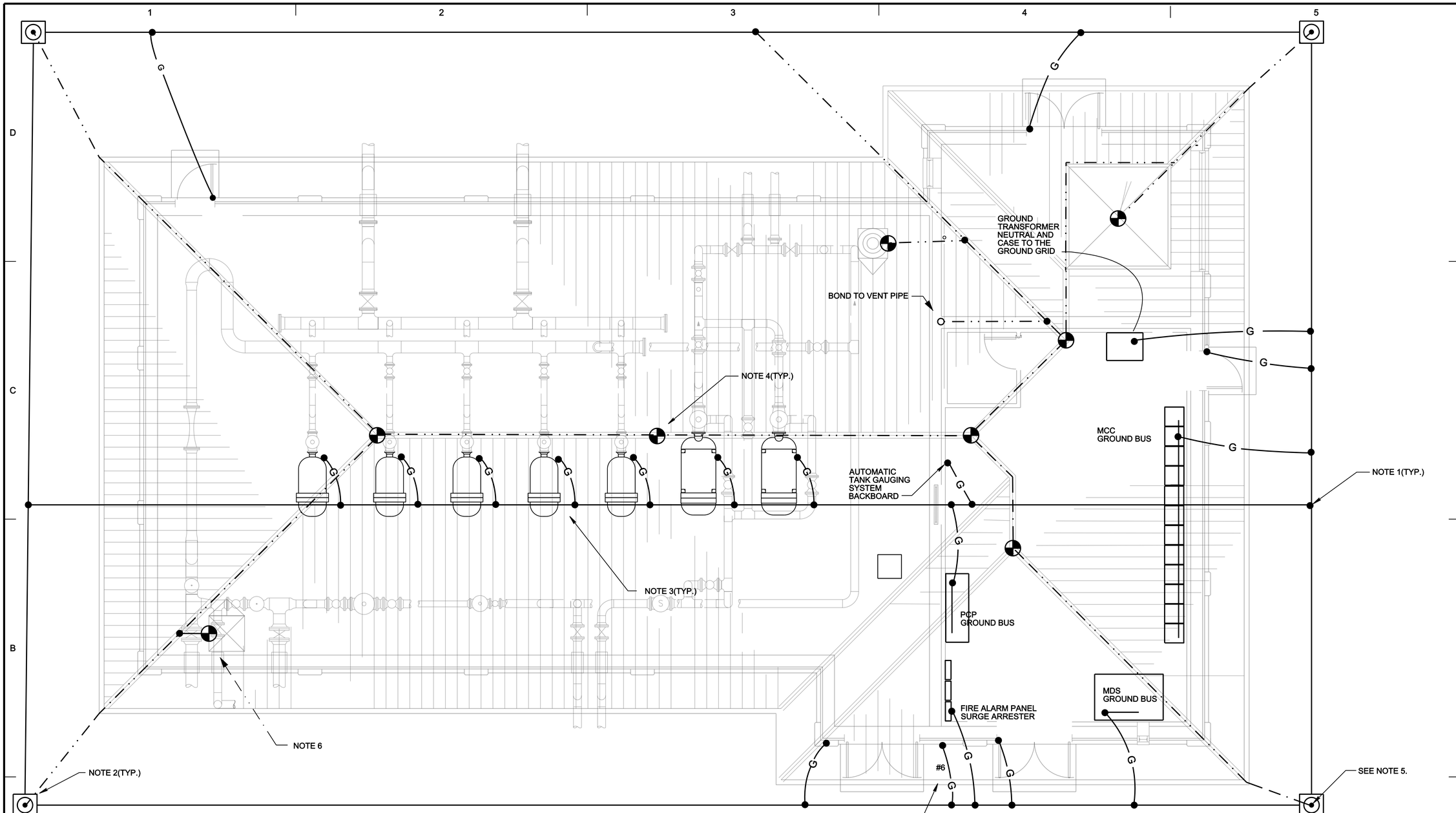

FLOOR PLAN

0 1000 2000 mm
SCALE: 1 : 50

SUPPLEMENTAL LEGEND:

- COPPERCLAD GROUND ROD. SEE GROUND ROD BOX DETAIL #3 ON SHEET EP501.
- COPPERCLAD GROUND ROD.
- AIR TERMINAL 610 x 9.53 COPPER.
- COUNTERPOISE. #120 BARE COPPER.
- MAIN AND DOWN LIGHTNING PROTECTION CONDUCTOR. #35 BARE COPPER.
- G — #70 BARE COPPER OR AS INDICATED.

NOTES:

1. SEE THE CABLE-TO-CABLE GROUNDING CONNECTION DETAIL #2 ON SHEET EP501.
2. SEE THE GROUND ROD DETAIL #3 ON SHEET EP501.
3. SEE THE FILTER SEPARATOR GROUNDING DETAIL #6 ON SHEET EP501.
4. SEE DETAIL #1 ON SHEET EP501.
5. THE DOWN CONDUCTORS SHALL BE RUN DOWN THE COLUMN IN PVC CONDUIT. THE DOWN CONDUCTORS SHALL HAVE EITHER A STRAIGHT OR PARALLEL (ACCESSIBLE) SPLICE INSTALLED NEAR GROUND LEVEL JUST BEFORE THE CABLES ENTER THE GROUND.
6. SEE AIR TERMINAL MOUNTING ON VENTILATOR DETAIL ON SHEET EP501.

US ARMY CORPS OF ENGINEERS
OMAHA DISTRICT

MARK	DESCRIPTION	DATE	APPR.

MARK	DESCRIPTION	DATE	APPR.

U. S. ARMY ENGINEER DISTRICT
CORPS OF ENGINEERS
OMAHA, NEBRASKA

DESIGNED BY: KEA
DWN BY: SCD
CKD BY: SLO
SUBMITTED BY: RLS
FILE NAME: OD40EG101.dwg
SIZE: 841x559
PLOT SCALE: 25 / in.
DATE: JULY 2010
SOLICITATION NO.: W912EF-10-X-00XX
CONTRACT NO.: W912EF-10-C-00XX
FILE NUMBER: X
PLOT DATE: 6/28/2010

DOD, CUTN'COVER STANDARDS
FILTER BUILDING

GROUNDING PLAN

SHEET IDENTIFICATION NUMBER
EG101

I:\dwgs\aleie\OD40EG101.dwg
gl5ed0ktea

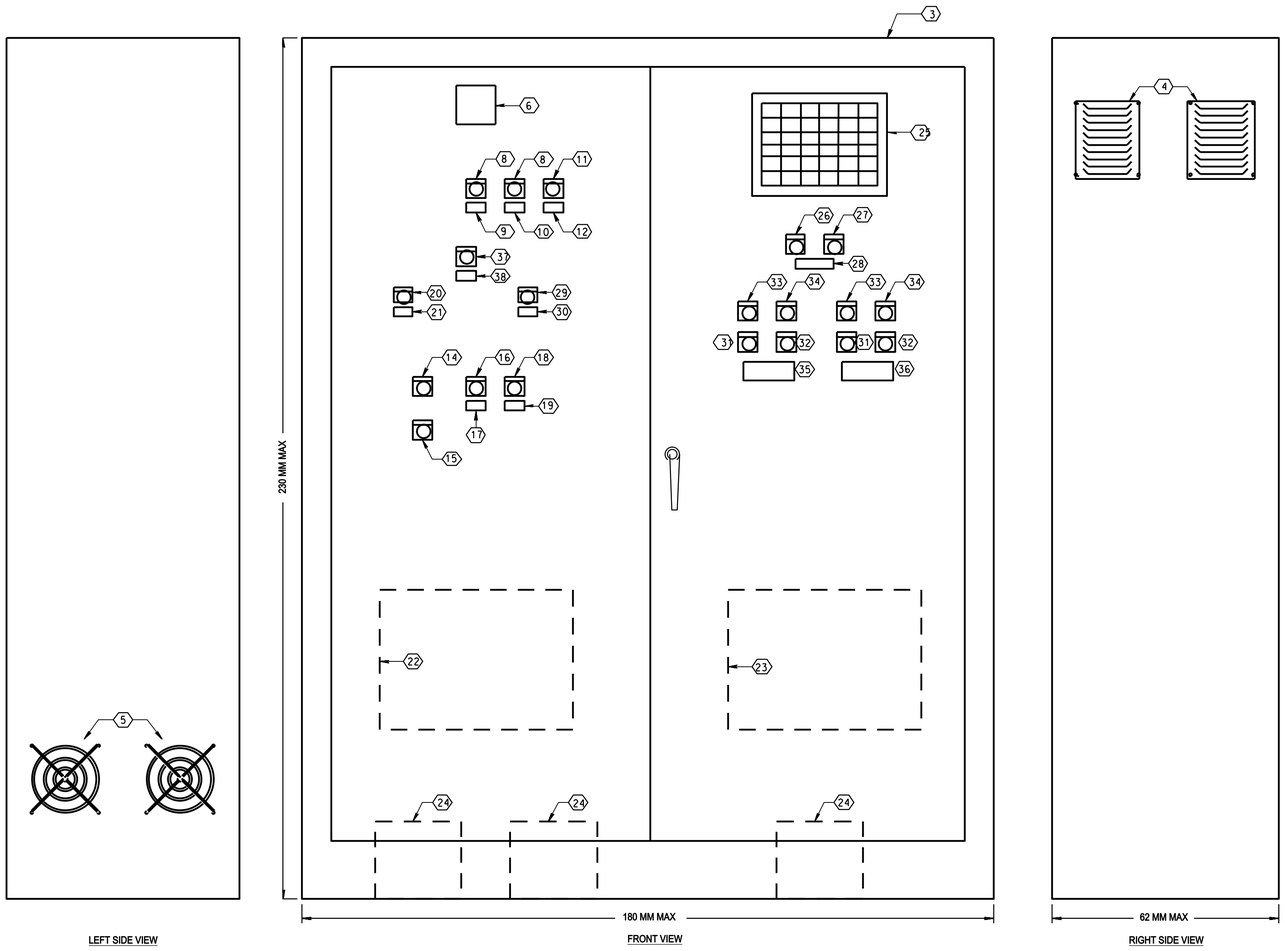

PUMP CONTROL PANEL (PCP)

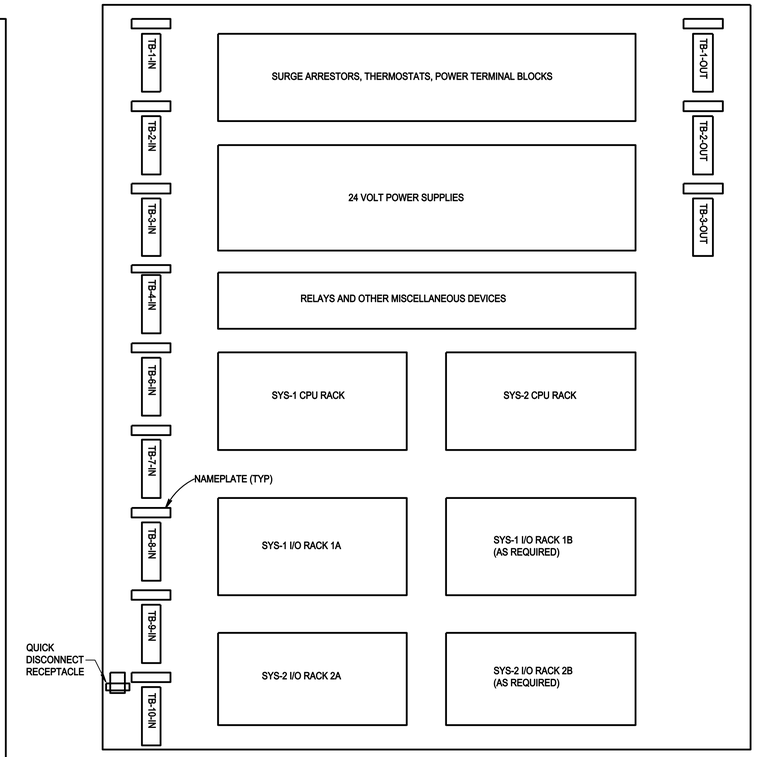

NOTES:

1. PROVIDE WIRE MANAGEMENT DUCTS.

2. FOLLOW THE ABOVE LAYOUT AS CLOSE AS POSSIBLE TO PROVIDE UNIFORMITY WITH EXISTING AND FUTURE FUELING SYSTEM CONTROL PANELS.

INTERIOR BACKPLAIN MOUNTING PANEL

NOTES:

1. SEE SHEETS EI503 THROUGH EI505 AND EI601 THROUGH EI604 FOR OTHER CONTROL PANEL RELATED REQUIREMENTS.

PUMP CONTROL PANEL LEGEND	
ITEM	DESCRIPTION
1	LED DISPLAY PANEL (SEE SHEET EI502)
2	NOT USED
3	FREE STANDING ENCLOSURE
4	VENTS
5	FANS
6	VIBRATING ALARM HORN (70db at 3.048M)
7	NOT USED
8	GREEN INDICATOR LIGHT
9	NAMEPLATE "CPU-1 ON"
10	NAMEPLATE "CPU-2 ON"
11	WHITE INDICATOR LIGHT
12	NAMEPLATE "EMERGENCY CIRCUIT POWER ON"
13	NOT USED
14	RED JUMBO MUSHROOM MOMENTARY CONTACT PUSHBUTTON WITH LEGEND PLATE "EMERGENCY STOP"
15	MOMENTARY CONTACT PUSHBUTTON WITH LEGEND PLATE "EMERGENCY STOP RESET"

PUMP CONTROL PANEL LEGEND CONT.	
ITEM	DESCRIPTION
16	2 POSITION MAINTAINED CONTACT SELECTOR SWITCH WITH LEGEND PLATE " SYS-1 SYS-2"
17	NAMEPLATE "SYSTEM INPUT SELECT"
18	4 POSITION KEY OPERATED MAINTAINED CONTACT SELECTOR SWITCH WITH LEGEND PLATE "AUTO OFF FLUSH TEST"
19	NAMEPLATE "FUELING MODE SELECT"
20	5 POSITION MAINTAINED CONTACT SELECTOR SWITCH WITH LEGEND PLATE "1 2 3 4 5" (CIRCULAR AROUND SWITCH)
21	NAMEPLATE "LEAD FUEL PUMP FROM TANK #1"
22	LOCKABLE CABINET LOCATED WITHIN THE PCP FOR THE LAPTOP COMPUTER.
23	CABINET WITHIN PCP FOR SPARE PARTS
24	UNINTERUPTABLE POWER SUPPLY (UPS) WITHIN CABINET
25	BACKLIGHT WINDOW ANNUNCIATOR, SEE SHEET EI601
26	MOMENTARY CONTACT PUSHBUTTON WITH LEGEND PLATE "TEST"
27	MOMENTARY CONTACT PUSHBUTTON WITH LEGEND PLATE "ACKNOWLEDGE"
28	NAMEPLATE "ANNUNCIATOR SYSTEM"
29	5 POSITION MAINTAINED CONTACT SELECTOR SWITCH WITH LEGEND PLATE "6 7 8 9 10" (CIRCULAR AROUND SWITCH)
30	NAMEPLATE "LEAD FUEL PUMP FROM TANK #2"

PUMP CONTROL PANEL LEGEND CONT.	
ITEM	DESCRIPTION
31	MOMENTARY CONTACT PUSHBUTTON WITH LEGEND PLATE "START"
32	MOMENTARY CONTACT PUSHBUTTON WITH LEGEND PLATE "STOP"
33	GREEN MINI-INDICATOR LIGHT WITH LEGEND PLATE "RUN"
34	RED MINI-INDICATOR LIGHT WITH LEGEND PLATE "STOP"
35	NAMEPLATE "WATER SUMP PUMP - WSP-1"
36	NAMEPLATE "WATER SUMP PUMP - WSP-2"
37	2 POSITION MAINTAINED CONTACT SELECTOR SWITCH WITH LEGEND PLATE "1 2" (CIRCULAR AROUND SWITCH)
38	NAMEPLATE "ACTIVE FUELING TANK"

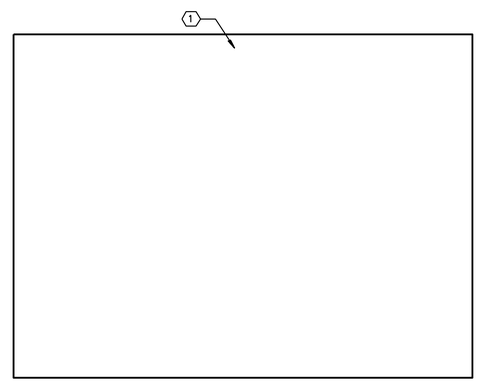

LED DISPLAY PANEL

US ARMY CORPS OF ENGINEERS
OMAHA DISTRICT

MARK	DESCRIPTION	DATE	APPR.

MARK	DESCRIPTION	DATE	APPR.

DESIGNED BY: KEA | DATE: JULY 2010
DWN BY: SVT | CKD BY: SLO | SOLICITATION NO.: W912BF-DA-X-00XX
SUBMITTED BY: RLS | CONTRACT NO.: W912BF-DA-C-00XX
FILE NAME: 0D40E501.dwg | FILE NUMBER: X
SIZE: 841x559 | PLOT SCALE: 25 / in. | PLOT DATE: 6/28/2010

U. S. ARMY ENGINEER DISTRICT
CORPS OF ENGINEERS
OMAHA, NEBRASKA

DOD, CUTN'COVER STANDARDS
FILTER BUILDING

PUMP CONTROL PANEL ELEVATION

SHEET IDENTIFICATION NUMBER
EI501

i:\dwgs\elec\0D40E501.dwg
g6edskeo

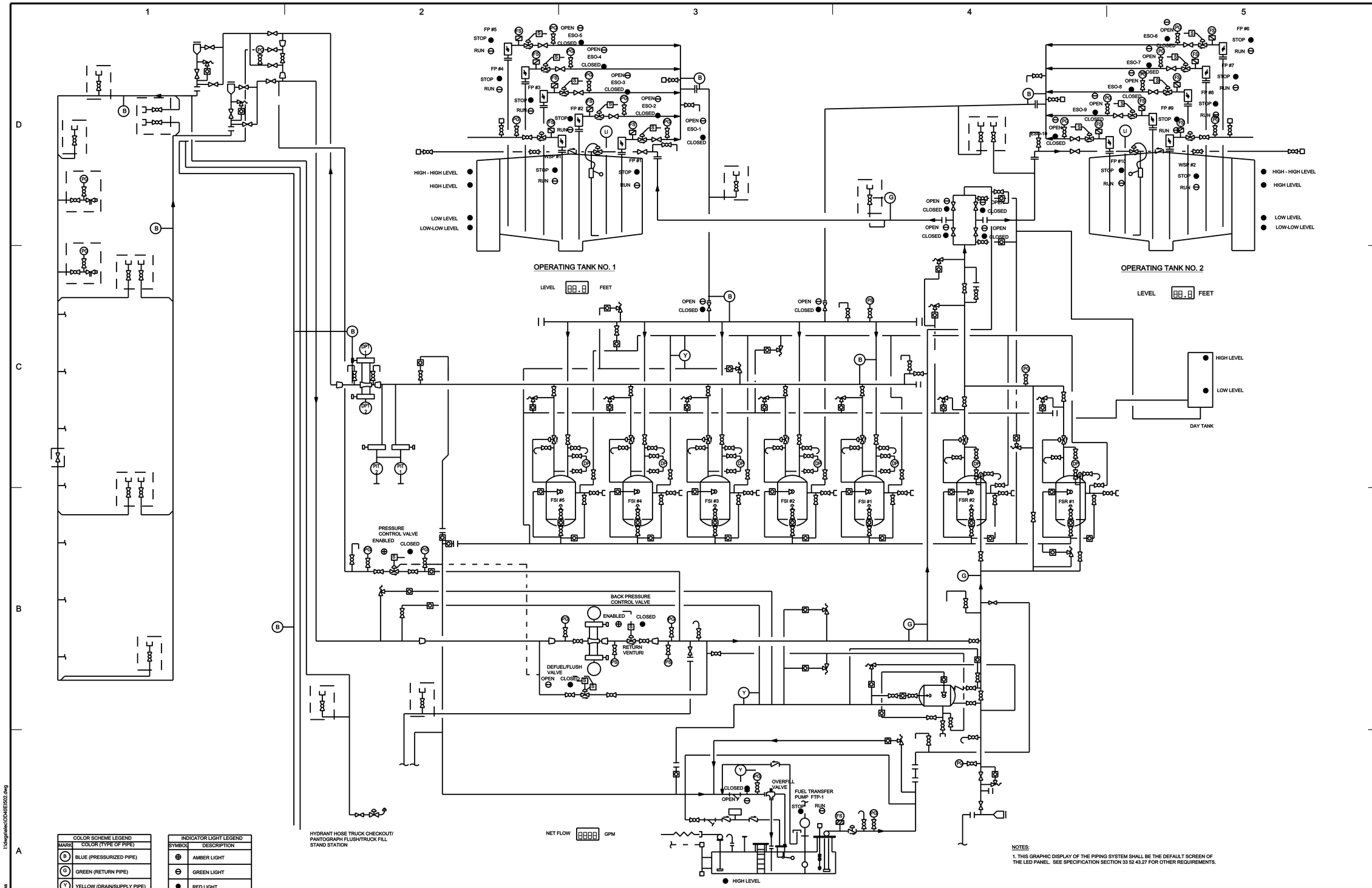

COLOR SCHEME LEGEND	
MARK	COLOR (TYPE OF PIPE)
B	BLUE (PRESSURIZED PIPE)
G	GREEN (RETURN PIPE)
Y	YELLOW (DRAIN/SUPPLY PIPE)

INDICATOR LIGHT LEGEND	
SYMBOL	DESCRIPTION
⊕	AMBER LIGHT
⊖	GREEN LIGHT
●	RED LIGHT

NOTES:

1. ALPHA-NUMERIC CHARACTERS AND EQUIPMENT OUTLINES SHALL BE BLACK ON WHITE BACKGROUND. TEXT SHALL BE 1/4" HEIGHT MINIMUM.
2. DEVIATION FROM THIS GRAPHIC DISPLAY IS ALLOWED ONLY WITH APPROVAL OF THE COMMAND FUEL ENGINEER EXCEPT THAT THE NUMBER OF FUELING HYDRANTS SHALL MATCH THE ACTUAL NUMBER ON THE APRON AND A HYDRANT HOSE TRUCK CHECKOUT STATION OR PANTAGRAPH FLUSHING CONNECTION AS APPLICABLE, SHALL BE INDICATED.

NOTES:

1. THIS GRAPHIC DISPLAY OF THE PIPING SYSTEM SHALL BE THE DEFAULT SCREEN OF THE LED PANEL. SEE SPECIFICATION SECTION 33 52 43.27 FOR OTHER REQUIREMENTS.

US ARMY CORPS OF ENGINEERS
OMAHA DISTRICT

MARK	DESCRIPTION	DATE	APPR.

MARK	DESCRIPTION	DATE	APPR.

U. S. ARMY ENGINEER DISTRICT
CORPS OF ENGINEERS
OMAHA, NEBRASKA

DESIGNED BY: KEA
DWN BY: SVT
CKD BY: SLO
SUBMITTED BY: RLS
FILE NAME: OD40EI502.dwg
SIZE: 841x559
PLOT SCALE: 25 / in.
DATE: JULY 2010
SOLICITATION NO.: W9128F-0X-X-0DXX
CONTRACT NO.: W9128F-0X-C-0DXX
FILE NUMBER: X
PLOT DATE: 6/28/2010

DOD, CUTN'COVER STANDARDS
FILTER BUILDING

GRAPHIC DISPLAY

SHEET IDENTIFICATION NUMBER
EI502

I:\dwgs\elec\OD40EI502.dwg
g6edxkea

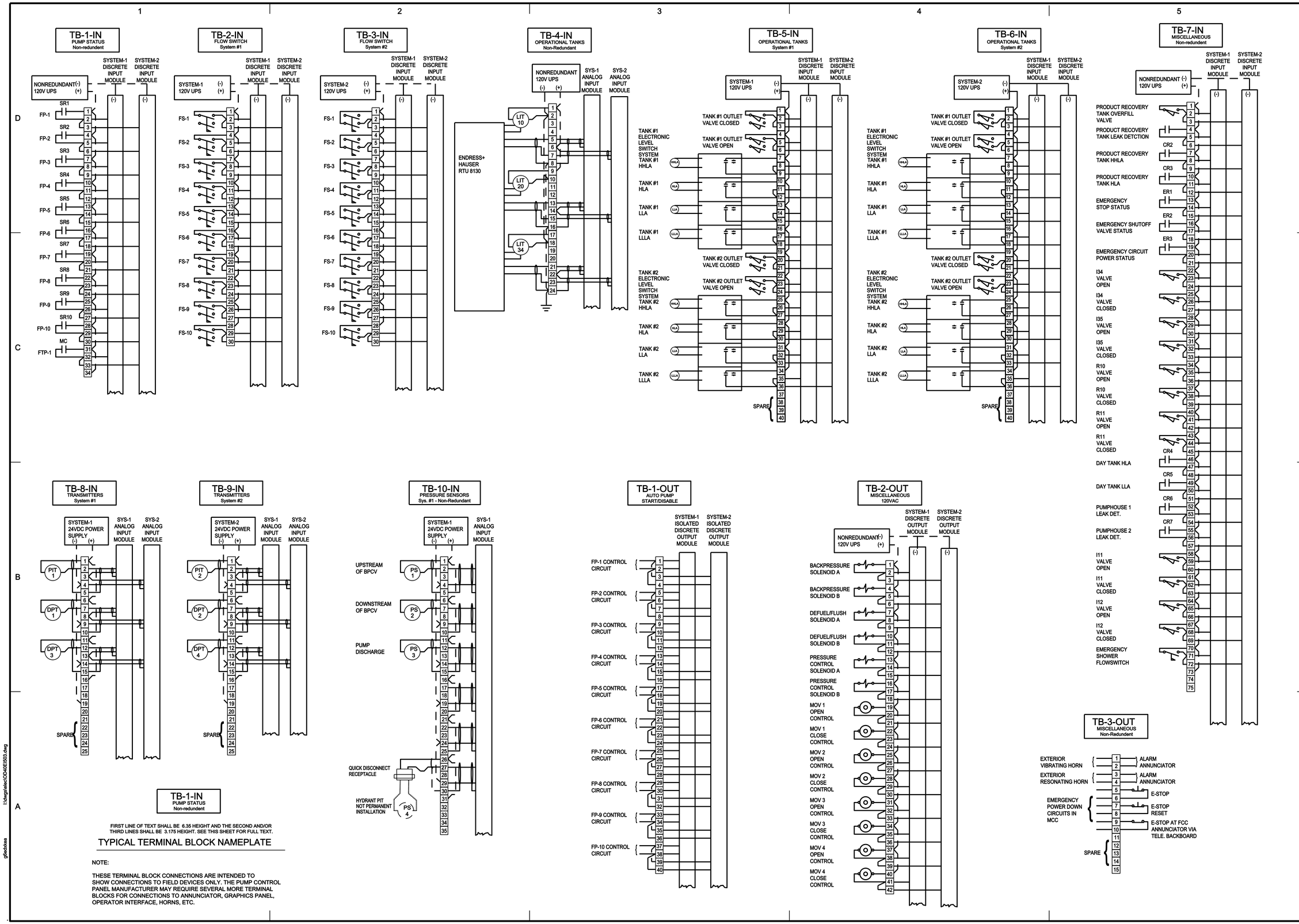

NOTE:

THESE TERMINAL BLOCK CONNECTIONS ARE INTENDED TO SHOW CONNECTIONS TO FIELD DEVICES ONLY. THE PUMP CONTROL PANEL MANUFACTURER MAY REQUIRE SEVERAL MORE TERMINAL BLOCKS FOR CONNECTIONS TO ANNUNCIATOR, GRAPHICS PANEL, OPERATOR INTERFACE, HORNS, ETC.

US ARMY CORPS OF ENGINEERS
OMAHA DISTRICT

MARK	DESCRIPTION	DATE	APPR.

MARK	DESCRIPTION	DATE	APPR.

DESIGNED BY: JEC
DWN BY: JEC
CKD BY: SLO
SUBMITTED BY: SLO
FILE NAME: CD4GEI503.dwg
SIZE: 841x559
PLOT SCALE: 25 / in.
DATE: JULY 2010
SOLICITATION NO.: W912BF-DA-X-DDXX
CONTRACT NO.: W912BF-DA-C-DDXX
FILE NUMBER: X
PLOT DATE: 6/28/2010

U. S. ARMY ENGINEER DISTRICT
CORPS OF ENGINEERS
OMAHA, NEBRASKA

DOD, CUTN'COVER STANDARDS
FILTER BUILDING

TERMINAL BLOCK CONECTIONS
(FOR FIELD DEVICES)

SHEET IDENTIFICATION NUMBER
EI503

I:\dwg\elec\CD4GEI503.dwg

gbedxkxsa

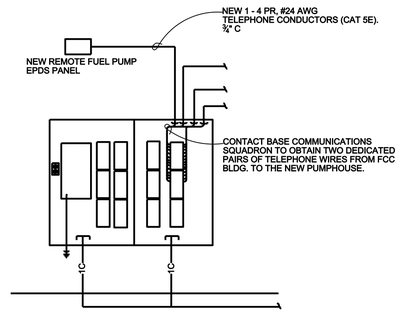

EXISTING (FCC) TELEPHONE BACKBOARD IN OPS BUILDING
NO SCALE

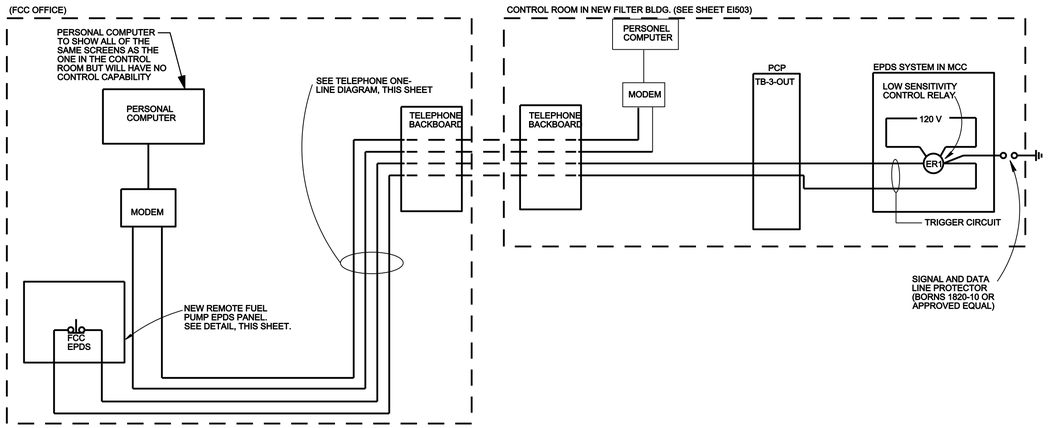

FCC OFFICE/CONTROL ROOM REMOTE EPDS AND COMPUTER SCHEMATIC
NO SCALE

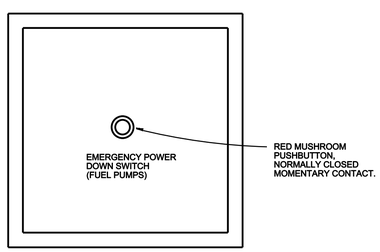

REMOTE FUEL PUMP EPDS PANEL
NO SCALE

US ARMY CORPS
OF ENGINEERS
OMAHA DISTRICT

MARK	DESCRIPTION	DATE	APPR.

MARK	DESCRIPTION	DATE	APPR.

U. S. ARMY ENGINEER DISTRICT
CORPS OF ENGINEERS
OMAHA, NEBRASKA

DESIGNED BY: KEA
DWN BY: SVT
CKD BY: SLO
SUBMITTED BY: RLS
FILE NAME: 0D40EI504.dwg
SIZE: 841x559
PLOT SCALE: 25 / in.
DATE: JULY 2010
SOLICITATION NO.: W9128F-0X-X-00XX
CONTRACT NO.: W9128F-0X-C-00XX
FILE NUMBER: X
PLOT DATE: 6/28/2010

DOD, CUTN'COVER STANDARDS
FILTER BUILDING

EPDS CONTROL AT FCC

SHEET
IDENTIFICATION
NUMBER
EI504

g6edxkeo i:\dwgs\elec\0D40EI504.dwg

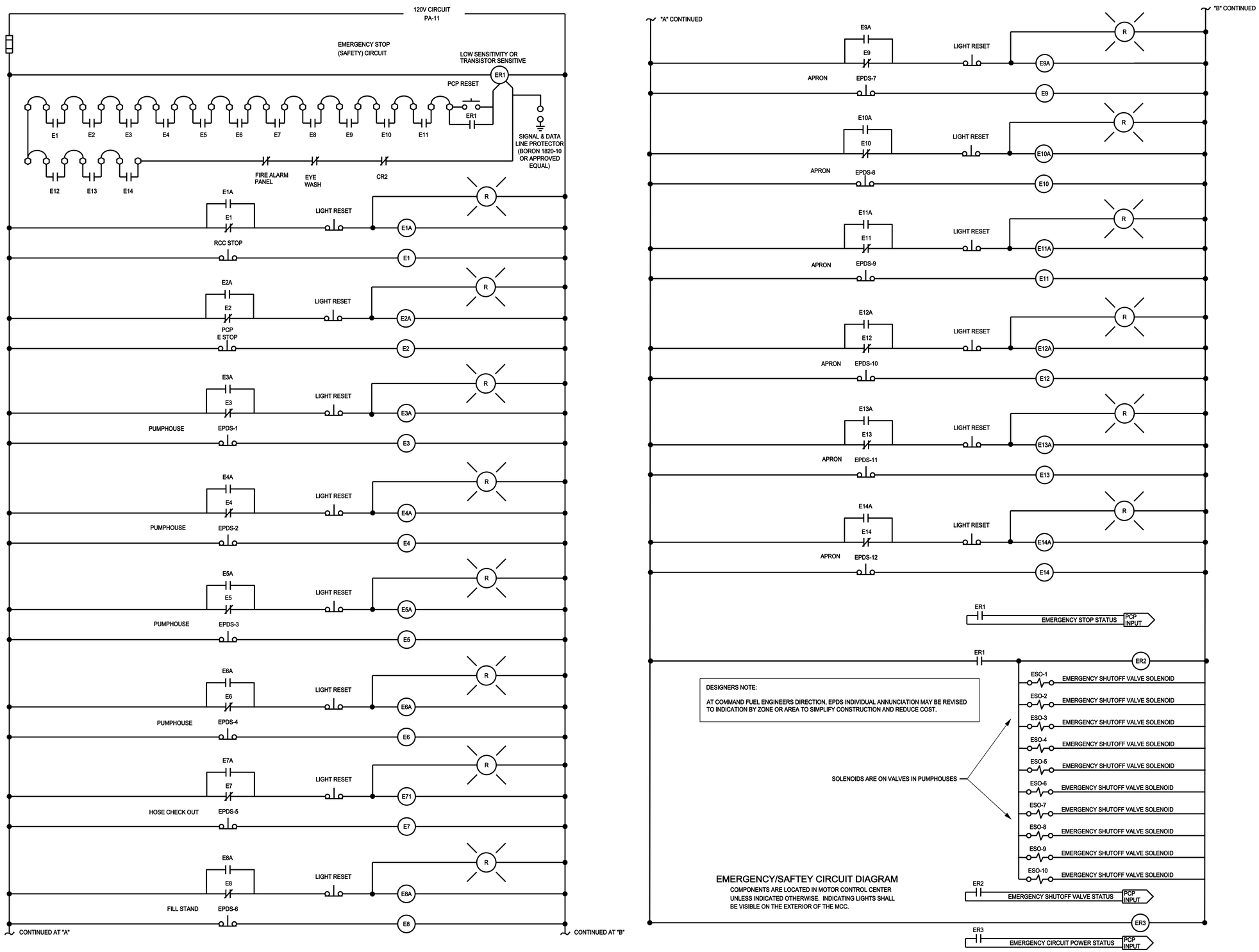

US ARMY CORPS OF ENGINEERS
OMAHA DISTRICT

MARK	DESCRIPTION	DATE	APPR.

MARK	DESCRIPTION	DATE	APPR.

DESIGNED BY: KEA
DWN BY: SVT
CKD BY: SLO
SUBMITTED BY: RS
DATE: JULY 2010
SOLICITATION NO.: W912BF-0X-X-003X
CONTRACT NO.: W912BF-0X-C-010X
FILE NUMBER: X
FILE NAME: OD40E505.dwg
PLOT SCALE: 25 / in.
PLOT DATE: 6/28/2010
SIZE: 841x559

U. S. ARMY ENGINEER DISTRICT
CORPS OF ENGINEERS
OMAHA, NEBRASKA

DOD, CUTN'COVER STANDARDS
FILTER BUILDING

EPDS DIAGRAMS

SHEET IDENTIFICATION NUMBER
EI505

i:\dwgs\elec\OD40E505.dwg
g6edxkeo

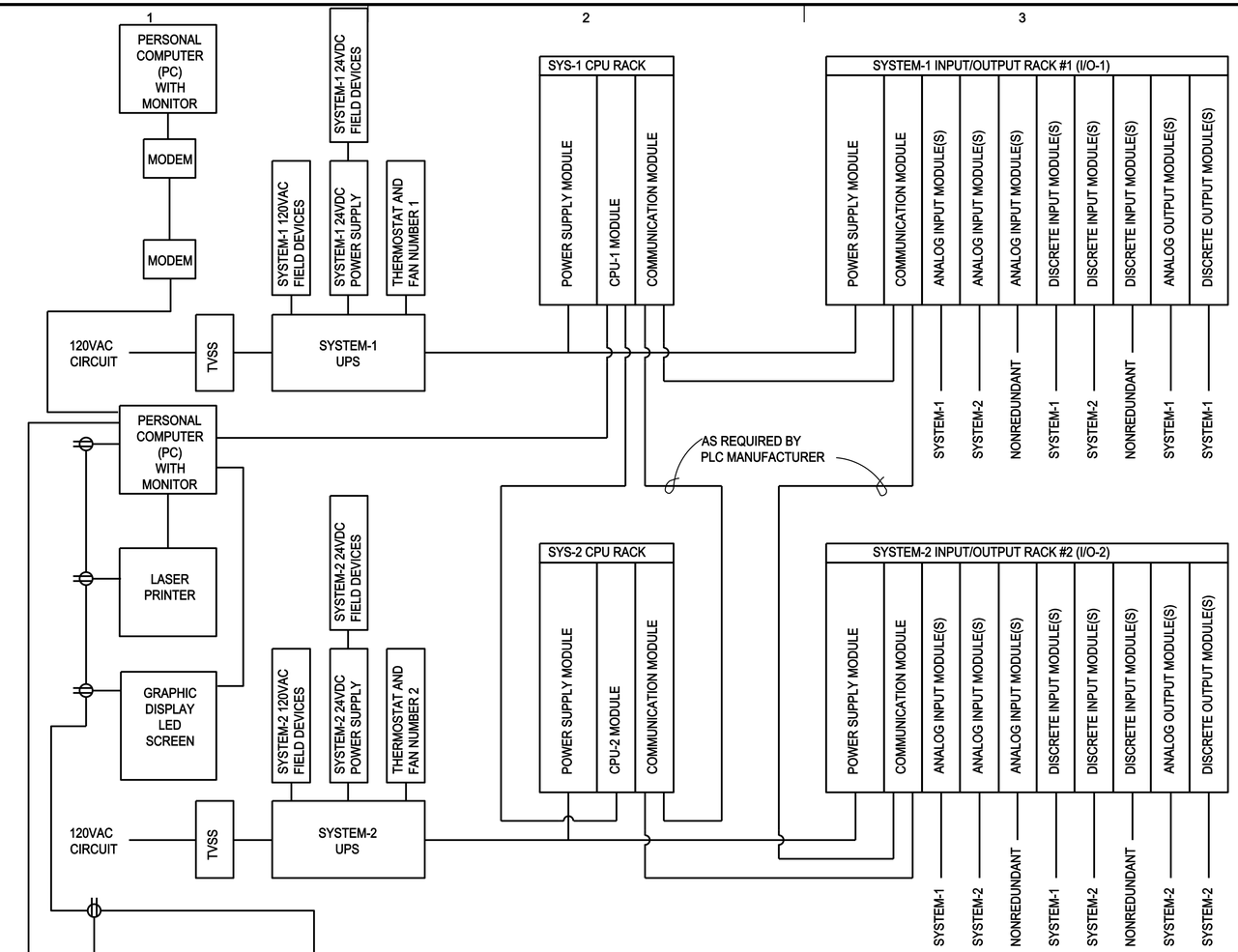

CONTROL SYSTEM BLOCK DIAGRAM

NOTES:

1. (WHITE) - WHITE WINDOW WITH BLACK LETTERS

2. (RED) - RED WINDOW WITH WHITE LETTERS

3. RED WINDOW ALARMS (CRITICAL) SHALL SOUND THE EXTERIOR RESONATING HORN AND PUMP CONTROL PANEL HORN. THE WHITE WINDOW ALARMS (NON-CRITICAL) SHALL SOUND THE EXTERIOR VIBRATING HORN AND THE PUMP CONTROL PANEL HORN.

4. CRITICAL ALARMS SHALL STOP ALL PUMPS RUNNING IN AUTOMATIC MODE.

ANNUNCIATOR PANEL LAYOUT

OPERATING TANK #1 HIGH-HIGH LEVEL (RED)	OPERATING TANK #2 HIGH-HIGH LEVEL (RED)	DAY TANK HIGH LEVEL (RED)	TANK 1 FUEL PUMP #1 FAILURE (WHITE)	TANK 2 FUEL PUMP #6 FAILURE (WHITE)	EMERGENCY STOP (RED)
OPERATING TANK #1 HIGH LEVEL (WHITE)	OPERATING TANK #2 HIGH LEVEL (WHITE)	DAY TANK LOW LEVEL (WHITE)	TANK 1 FUEL PUMP #2 FAILURE (WHITE)	TANK 2 FUEL PUMP #7 FAILURE (WHITE)	EMER. SHOWER/ EYEWASH ALARM (RED)
OPERATING TANK #1 LOW LEVEL (WHITE)	OPERATING TANK #2 LOW LEVEL (WHITE)	SPARE (WHITE)	TANK 1 FUEL PUMP #3 FAILURE (WHITE)	TANK 2 FUEL PUMP #8 FAILURE (WHITE)	SYSTEM-1 PLC FAILURE (WHITE)
OPERATING TANK #1 LOW-LOW LEVEL (RED)	OPERATING TANK #2 LOW-LOW LEVEL (RED)	SPARE (WHITE)	TANK 1 FUEL PUMP #4 FAILURE (WHITE)	TANK 2 FUEL PUMP #9 FAILURE (WHITE)	SYSTEM-2 PLC FAILURE (WHITE)
PRODUCT RECOVERY TANK HIGH-HIGH LEVEL (RED)	PRODUCT RECOVERY TANK LEAK DETECTED (WHITE)	PUMPHOUSE 1 LIQ. SENSOR ALARM (WHITE)	TANK 1 FUEL PUMP #5 FAILURE (WHITE)	TANK 2 FUEL PUMP #10 FAILURE (WHITE)	SYSTEM-1 DATA FAILURE (WHITE)
PRODUCT RECOVERY TANK HIGH LEVEL (WHITE)	PRODUCT RECOVERY TANK OVERFILL VALVE CLOSED (WHITE)	PUMPHOUSE 2 LIQ. SENSOR ALARM (WHITE)	4-VALVE/ MANIFOLD/TANK SET UP ERROR (WHITE)	PCP HIGH TEMPERATURE (WHITE)	SYSTEM-2 DATA FAILURE (WHITE)

US ARMY CORPS OF ENGINEERS
OMAHA DISTRICT

MARK	DESCRIPTION	DATE	APPR.

MARK	DESCRIPTION	DATE	APPR.

DESIGNED BY: KEA
DWN BY: SVT
CKD BY: SLO
SUBMITTED BY: RLA
FILE NAME: CD40E601.dwg
SIZE: 841x559
PLOT SCALE: 25 /in.
DATE: JULY 2010
SOLICITATION NO.: W912BF-10-X-0XXX
CONTRACT NO.: W912BF-10-C-0XXX
FILE NUMBER: X
PLOT DATE: 6/28/2010

U. S. ARMY ENGINEER DISTRICT
CORPS OF ENGINEERS
OMAHA, NEBRASKA

DOD, CUTN'COVER STANDARDS
FILTER BUILDING

CONTROL SYSTEM DIAGRAMS

SHEET IDENTIFICATION NUMBER
EI601

I:\dwgs\sles\CD40E601.dwg
g6ecbxsa

g6edxjec I:\dwgs\elec\OD40EI602.dwg

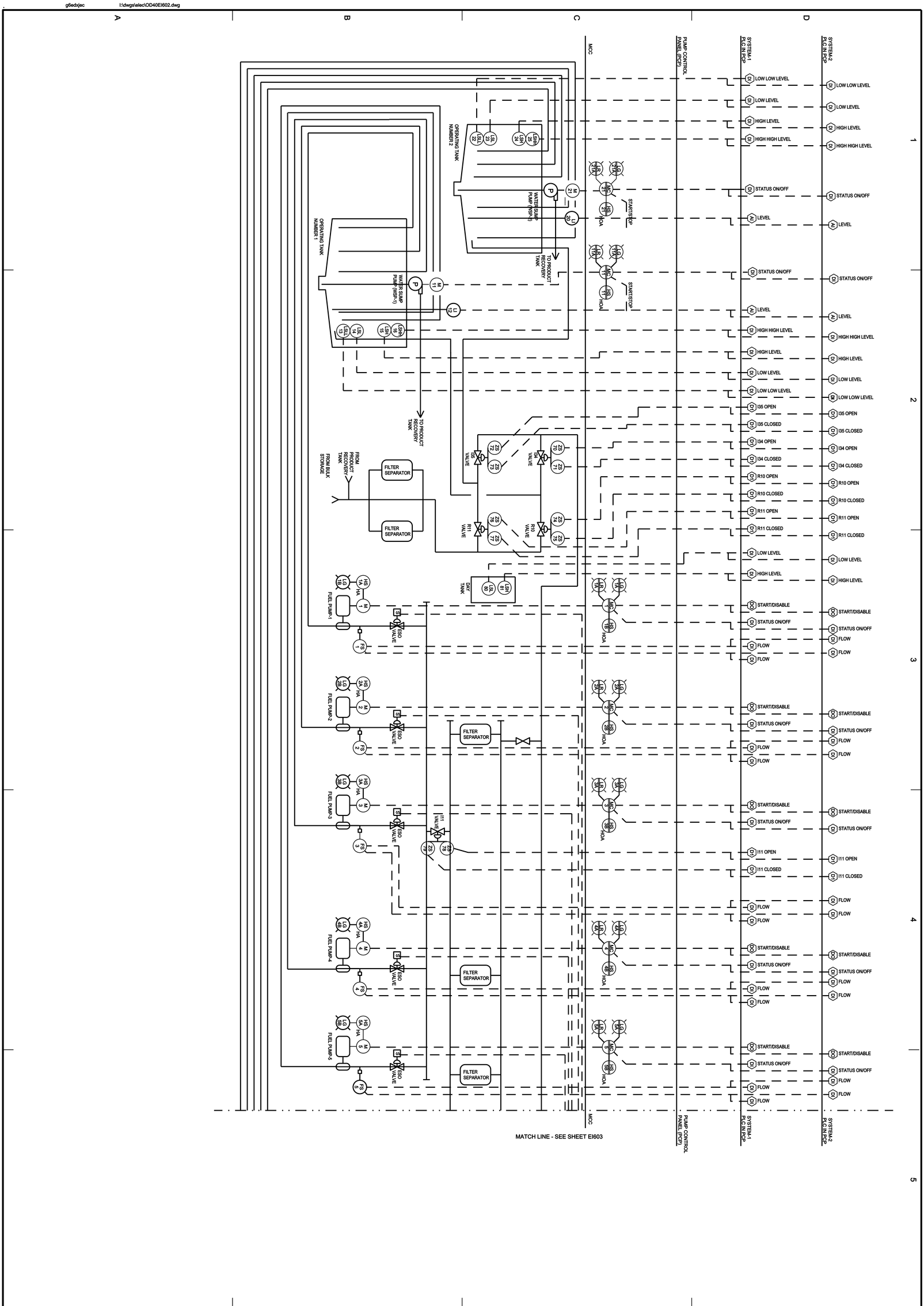

SHEET IDENTIFICATION NUMBER
EI602

DOD, CUT'N'COVER STANDARDS
FILTER BUILDING

CONTROL SYSTEM I/O SHEET I

U. S. ARMY ENGINEER DISTRICT
CORPS OF ENGINEERS
OMAHA, NEBRASKA

DESIGNED BY: KEA		DATE: JULY 2010
DWN BY: SVT	CKD BY: SLO	SOLICITATION NO.: W9128F-0X-X-00XX
SUBMITTED BY: RLS		CONTRACT NO.: W9128F-0X-C-00XX
FILE NAME: OD40EI602.dwg		FILE NUMBER: X
SIZE: 841x559	PLOT SCALE: 25 / in.	PLOT DATE: 7/1/2010

MARK	DESCRIPTION	DATE	APPR.	MARK	DESCRIPTION	DATE	APPR.

US ARMY CORPS OF ENGINEERS
OMAHA DISTRICT

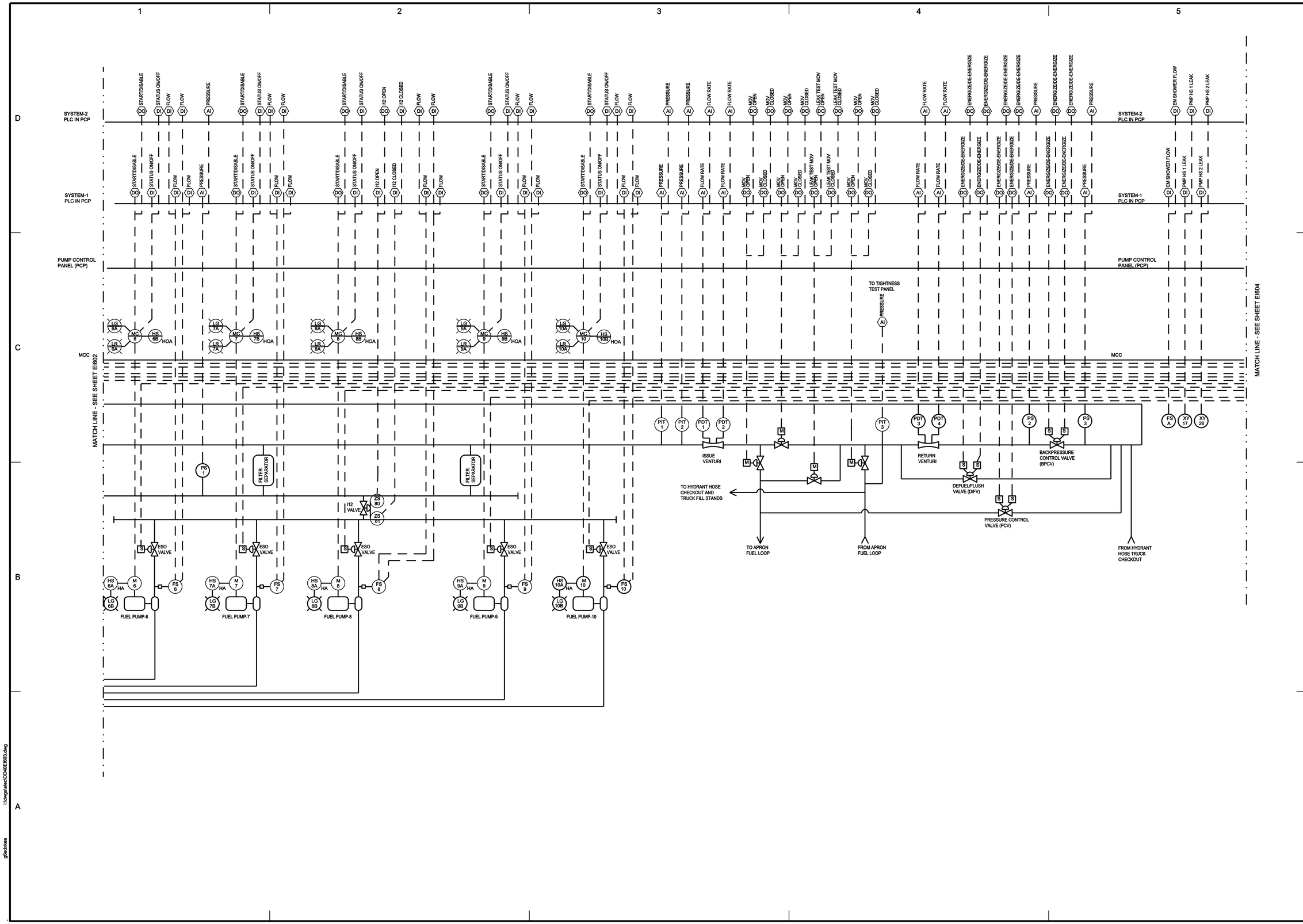

US ARMY CORPS OF ENGINEERS
OMAHA DISTRICT

MARK	DESCRIPTION	DATE	APPR.

MARK	DESCRIPTION	DATE	APPR.

DESIGNED BY: KEA
DWN BY: SVT
SUBMITTED BY: SLO
FILE NAME: ODA0EI603.dwg
SIZE: 841x559
CKD BY: SLO
PLOT SCALE: 25 / in.
DATE: JULY 2010
SOLICITATION NO.: W912BF-DA-X-003X
CONTRACT NO.: W912BF-DA-C-003X
FILE NUMBER: X
PLOT DATE: 6/28/2010

U. S. ARMY ENGINEER DISTRICT
CORPS OF ENGINEERS
OMAHA, NEBRASKA

DOD, CUTNCOVER STANDARDS
FILTER BUILDING

CONTROL SYSTEM I/O SHEET 2

SHEET IDENTIFICATION NUMBER
EI603

I:\dwgs\elec\ODA0EI603.dwg
gBedd0eas

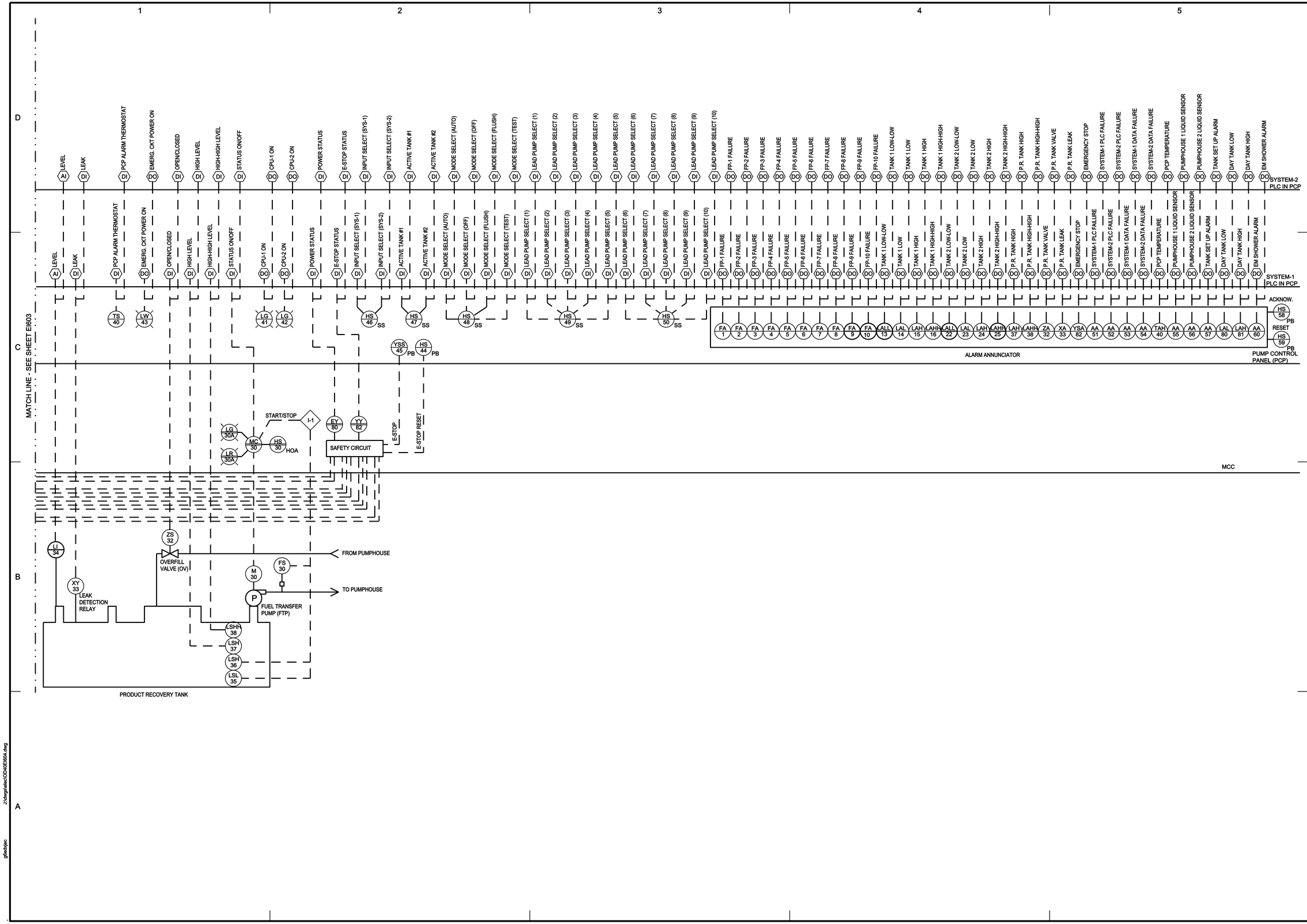

US ARMY CORPS OF ENGINEERS
OMAHA DISTRICT

MARK	DESCRIPTION	DATE	APPR.

MARK	DESCRIPTION	DATE	APPR.

DESIGNED BY: KEA
DWN BY: SVT
CKD BY: SLO
SUBMITTED BY: SLO
DATE: JULY 2010
SOLICITATION NO.: W912BF-10-X-003X
CONTRACT NO.: W912BF-10-C-003XX
FILE NUMBER: X
FILE NAME: CDUIEI604.dwg
PLOT SCALE: 25 / in.
SIZE: 841x559
PLOT DATE: 7/6/2010

U. S. ARMY ENGINEER DISTRICT
CORPS OF ENGINEERS
OMAHA, NEBRASKA

DOD, CUTN/COVER STANDARDS
FILTER BUILDING

CONTROL SYSTEM I/O SHEET 3

SHEET IDENTIFICATION NUMBER
EI604

J:\dwgs\elec\ODA\EI604.dwg
gfeldjec

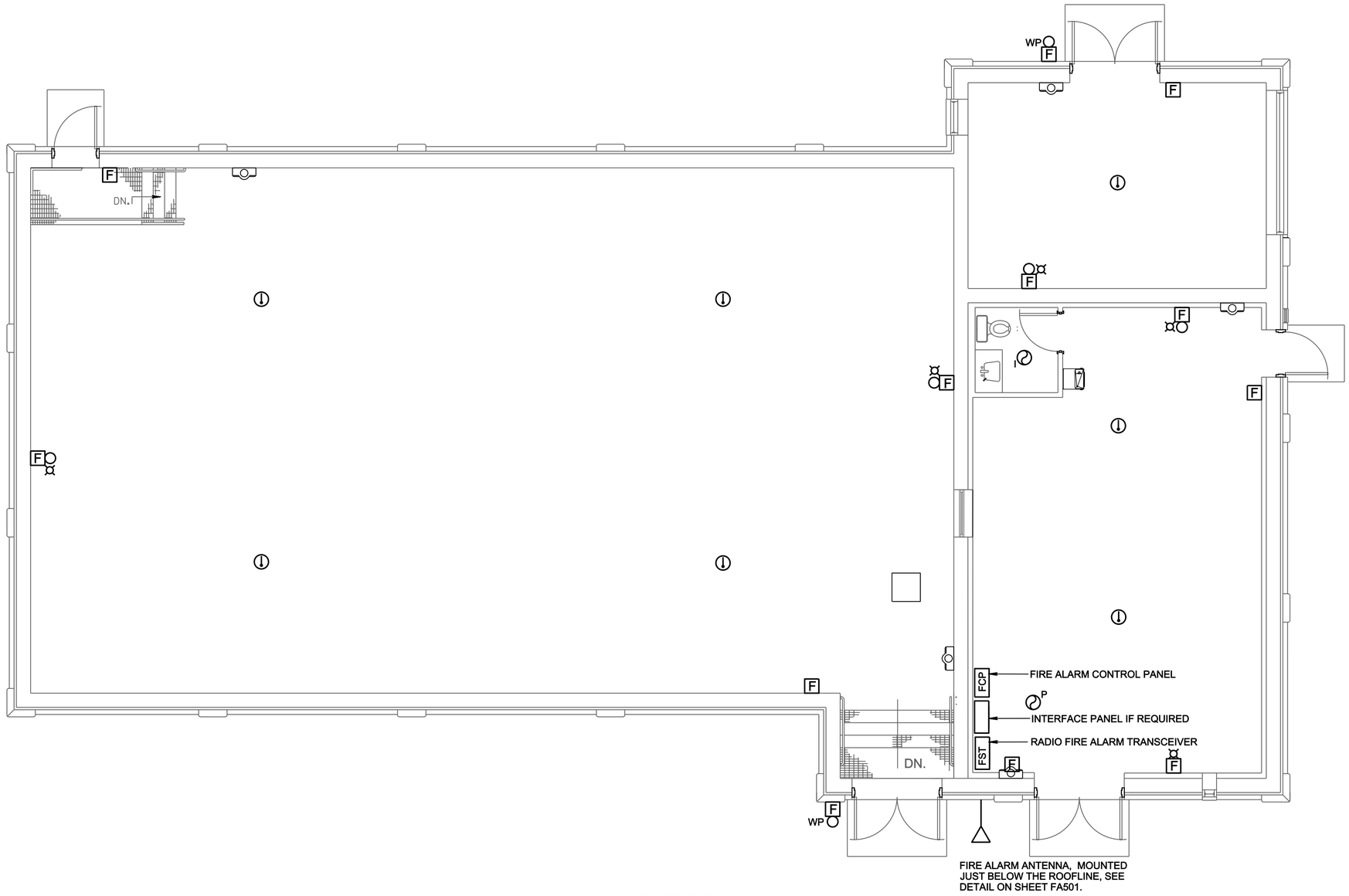

FLOOR PLAN

0 1000 2000 mm
SCALE: 1 : 50

NOTES:

1. THE ENTIRE VOLUME OF THE THE FILTER ROOM IN THE FILTER BUILDING SHALL BE CONSIDERED A CLASS 1, DIVISION 1 GROUP D (T2D-215C) HAZARDOUS LOCATION. ALL ELECTRICAL EQUIPMENT INSTALLED WITHIN THE HAZARDOUS AREA SHALL BE SPECIFICALLY APPROVED BY UL OR FACTORY MUTUAL FOR THE ABOVE HAZARDOUS AREA CLASSIFICATION. ELECTRICAL INSTALLATION SHALL BE IN ACCORDANCE WITH THE NEC (NFPA 70) FOR CLASS 1, DIVISION 1, GROUP D HAZARDOUS LOCATIONS.

2. EACH CONDUIT ORIGINATING IN OR PASSING THROUGH OR UNDER A HAZARDOUS AREA AND PENETRATING CONTROL ROOM WALLS, ROOF, OR FLOOR SHALL HAVE EXPLOSION PROOF SEALING FITTINGS INSTALLED IN THE INTERIOR OF THE CONTROL ROOM.

3. ALL METALLIC CONDUITS THAT ARE NOT ATTACHED TO A GROUNDED PANEL OR ENCLOSURE SHALL BE GROUNDED USING A GROUNDED BUSHING.

DESIGNER NOTE:
THE PLANS INDICATE A RADIO FIRE ALARM TRANSCEIVER, WHICH IS FOR THOSE MILITARY INSTALLATIONS THAT HAVE BASEWIDE RADIO FIRE REPORTING SYSTEMS. MODIFY PLANS FOR INSTALLATIONS THAT HAVE ANOTHER TYPE OF FIRE REPORTING SYSTEM.

US ARMY CORPS OF ENGINEERS
OMAHA DISTRICT

MARK	DESCRIPTION	DATE	APPR.

MARK	DESCRIPTION	DATE	APPR.

DESIGNED BY: KEA
DWN BY: SCD
CKD BY: SLO
SUBMITTED BY: RLS
FILE NAME: OD40FA101.dwg
SIZE: 841x559
PLOT SCALE: 25 / in.
DATE: JULY 2010
SOLICITATION NO.: W9128F-0X-X-00XX
CONTRACT NO.: W9128F-0X-C-00XX
FILE NUMBER: X
PLOT DATE: 6/30/2010

U. S. ARMY ENGINEER DISTRICT
CORPS OF ENGINEERS
OMAHA, NEBRASKA

DOD, CUTN'COVER STANDARDS
FILTER BUILDING

FIRE DETECTION SYSTEM

SHEET IDENTIFICATION NUMBER
FA101

I:\dwgs\elec\OD40FA101.dwg
g6edxjec

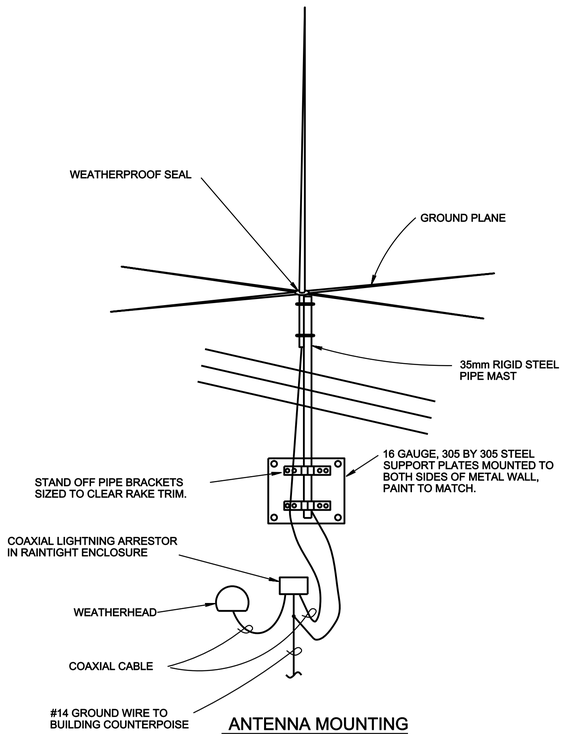

ANTENNA MOUNTING
NO SCALE

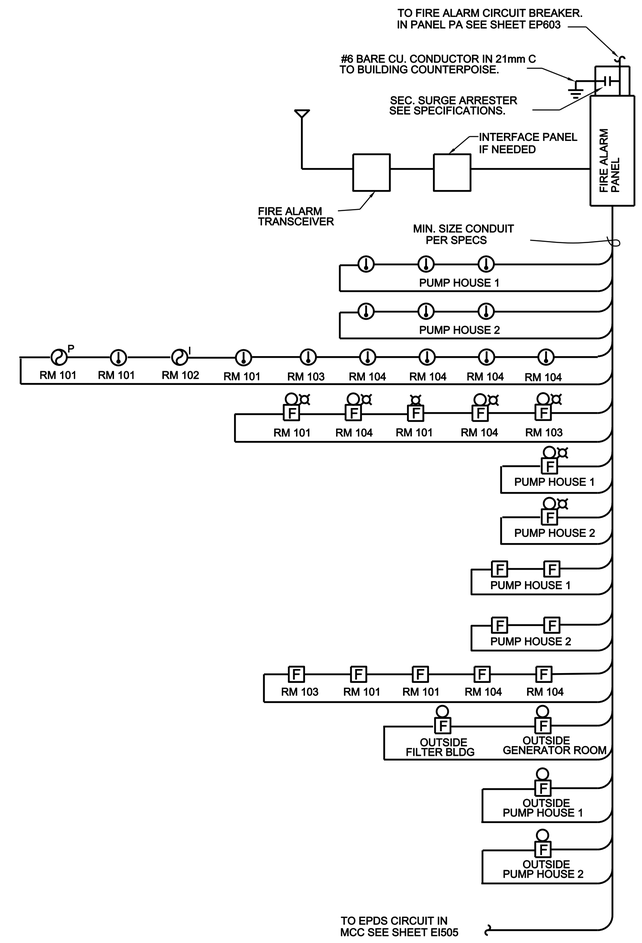

FIRE ALARM RISER DIAGRAM

US ARMY CORPS OF ENGINEERS
OMAHA DISTRICT

MARK	DESCRIPTION	DATE	APPR.

MARK	DESCRIPTION	DATE	APPR.

U. S. ARMY ENGINEER DISTRICT
CORPS OF ENGINEERS
OMAHA, NEBRASKA

DESIGNED BY: KEA
DWN BY: SCD
CKD BY: SLO
SUBMITTED BY: RLS
FILE NAME: OD40FA501.dwg
SIZE: 841x559
PLOT SCALE: 25 / in.
DATE: JULY 2010
SOLICITATION NO.: W9128F-0X-X-00XX
CONTRACT NO.: W9128F-0X-C-00XX
FILE NUMBER: X
PLOT DATE: 6/28/2010

DOD, CUT'N'COVER STANDARDS
FILTER BUILDING

FIRE DETECTION SYSTEM DETAILS

SHEET IDENTIFICATION NUMBER
FA501

g6edxkea
I:\dwgs\elec\OD40FA501.dwg