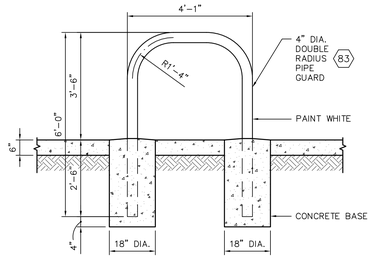

7 DOUBLE RADIUS PIPE GUARD DETAIL
SCALE: 1/2"=1'-0"

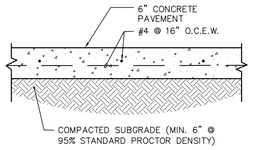

8 CONCRETE PAVING DETAIL
SCALE: 1"=1'-0"

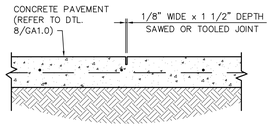

9 CONTROLLED JOIINT DETAIL
SCALE: 1"=1'-0"

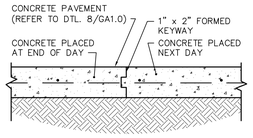

10 CONSTRUCTION JOINT DETAIL
SCALE: 1"=1'-0"

PRE-ENGINEERED, PREFABRICATED CANOPY SPECIFICATIONS

COLUMNS:	TUBULAR STEEL - A-500, GRADE B, PRIME FINISH.
STRUCTURAL STEEL:	ALL WIDE FLANGE W/BOLTED CONNECTIONS, A36 GRADE, PRIME FINISH.
DECKING:	SL-316 EMBOSSED WHITE, 20 GA. A-448, GRADE C MINIMUM.
FASCIA:	PRE-FINISHED WHITE, KYNAR METAL BACK LAMINATED.
FASCIA FRAMING:	1 1/2" X 1 1/2" X 18 GAUGE ANGLE.
FASTENERS:	SCREWS AND RIVETS (STAINLESS STEEL).
GUTTER:	EMBOSSED, 20 GA.
DRAINAGE:	PVC IN COLUMNS.
GROUNDING:	ALL CANOPIES TO BE GROUNDED PER UFC STANDARDS AND MEET LATEST EDITION NFPA 780 REQUIREMENTS
DESIGN:	SITE SPECIFIC PARAMETERS PER THE UBC, LATEST EDITION, CALCULATIONS SEALED BY A REGISTERED PROFESSIONAL ENGINEER INCLUDING ENTIRE CANOPY STRUCTURE AND FOOTINGS, (CANOPY DESIGN MUST BE SUBMITTED FOR APPROVAL PRIOR TO FABRICATION).

CONTRACTOR TO CONTACT AND ATTAIN ALL "AAFES" CANOPY GRAPHICS FROM AAFES. GRAPHICS INSTALL BY CONTRACTOR.

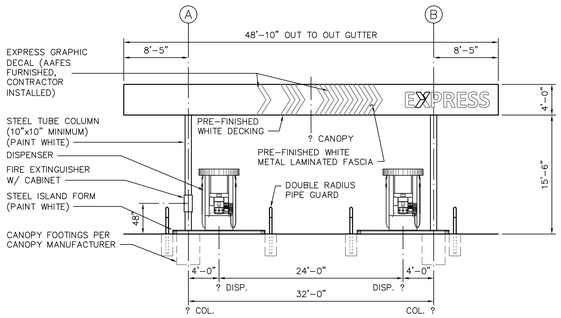

3 CANOPY ELEVATION - EAST
SCALE: 1/8"=1'-0"

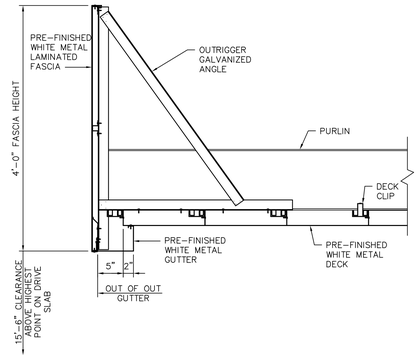

4 SECTION THRU CANOPY FASCIA
SCALE: 1"=1'-0"

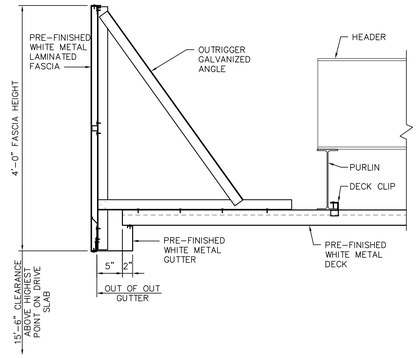

5 SECTION THRU CANOPY FASCIA
SCALE: 1"=1'-0"

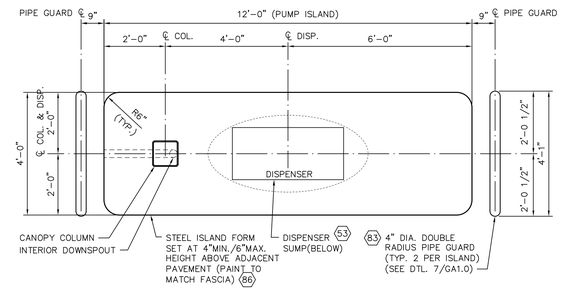

6 ENLARGED PUMP ISLAND PLAN
SCALE: 1/2"=1'-0"

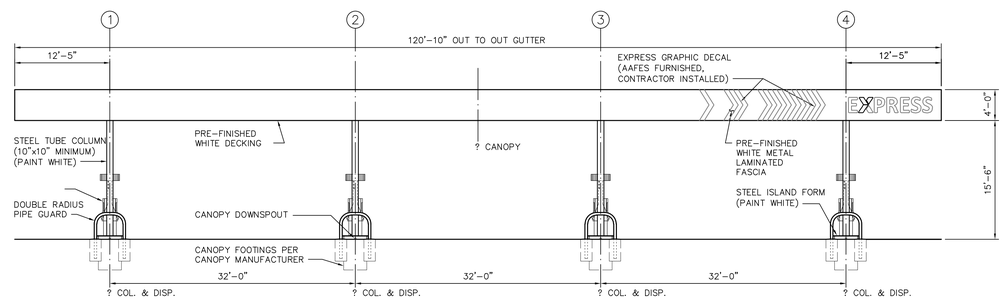

2 CANOPY ELEVATION - SOUTH
SCALE: 1/8"=1'-0"

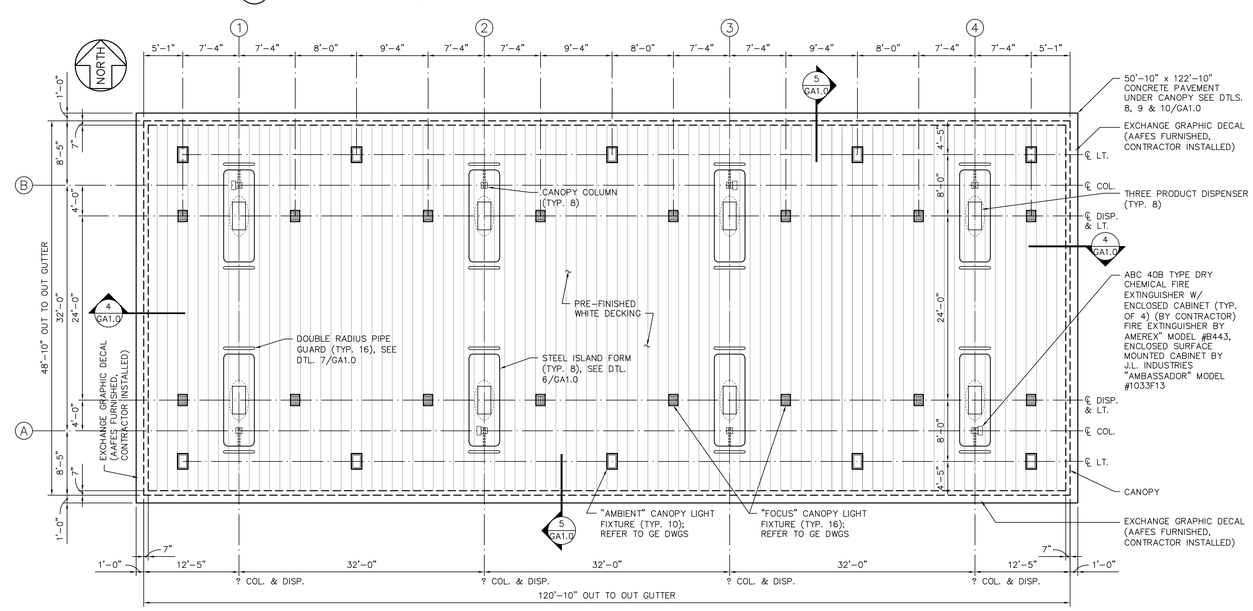

1 CANOPY PLAN AND LIGHTING LAYOUT
SCALE: 1/8"=1'-0"

EXCHANGE™

DATE	REVISION NO. & DESCRIPTION

GENERAL NOTE:
THESE DRAWINGS APPLY TO FACILITIES SUCH AS SHOPRETTES AND EXCHANGES WHICH ARE EXEMPT FROM THE FEDERAL ACQUISITION REGULATION (FAR) REQUIREMENTS

NOTE TO A/E:
THESE ARE PROTOTYPE DRAWINGS

These drawings, details, notes, specifications and calculations are incomplete and generic in nature. They are not intended for site-specific conditions as-is. Morris and Associates, Engineers, Inc., and its' consultants does not warrant or guarantee the accuracy or applicability of these documents to the requirements of your project, current codes or local conditions. The A/E is responsible to secure the services of an appropriately experienced and licensed professional, as applicable, to determine any code or site-specific requirements and review, update and modify the documents as required for each specific project.

DRAWN BY: SR
CHECKED BY: JL
DATE: –

Firm #1440
morris + associates
Build on Our Strengths
12715 TELGE ROAD
CYPRESS, TX. 77429
(281) 855-6433
(281) 858-4304 FAX

© 2014 Morris Associates, Engineers, Inc. All rights reserved.

PROJECT:
UST STANDARDS
AMERON PIPING OPTION

DRAWING TITLE:
8 PACK CANOPY
REFLECTED CEILING PLAN
AND ELEVATIONS

DATE:	SCALE:	SHEET:
08/18/14	AS SHOWN	GA1.0
DRAWING/PROJECT NO: –		OF_

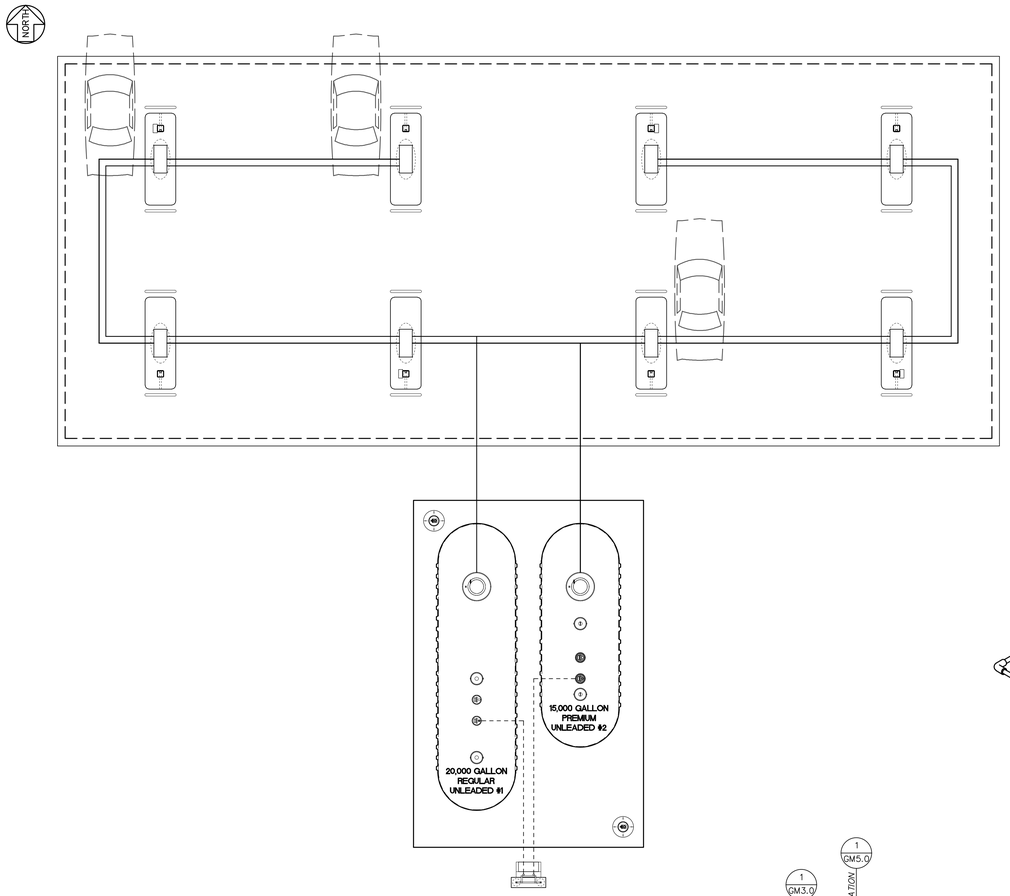

1 PETROLEUM PIPING PLAN

SCALE: NONE

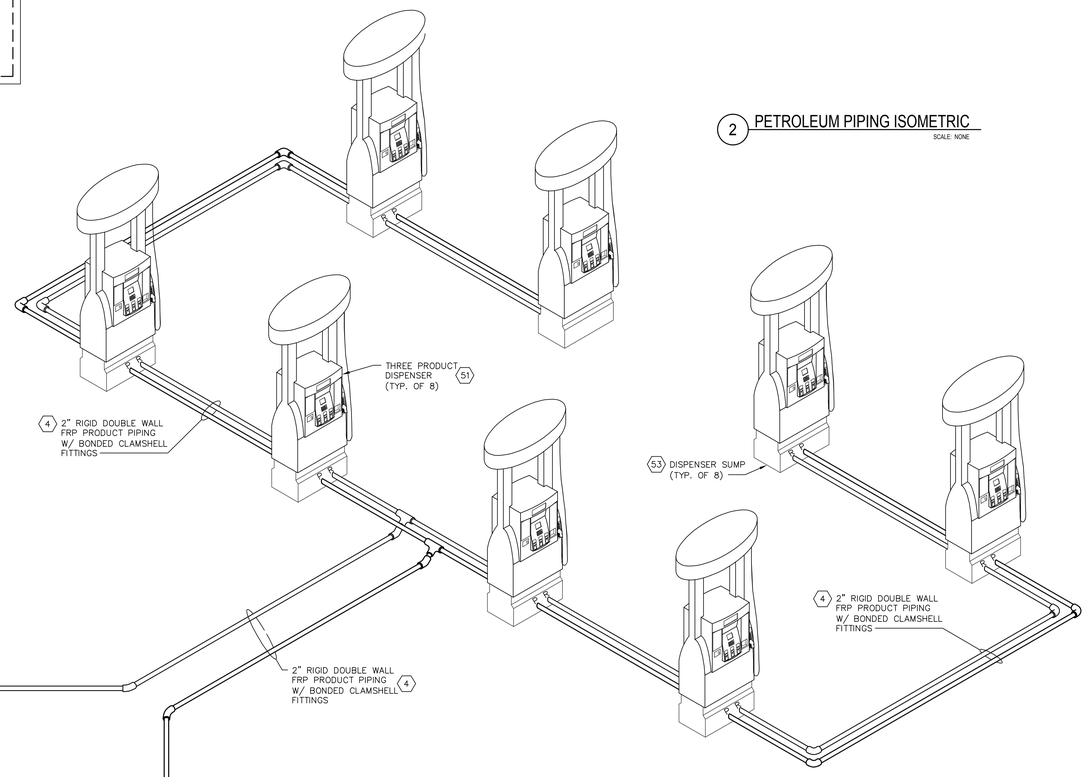

2 PETROLEUM PIPING ISOMETRIC

SCALE: NONE

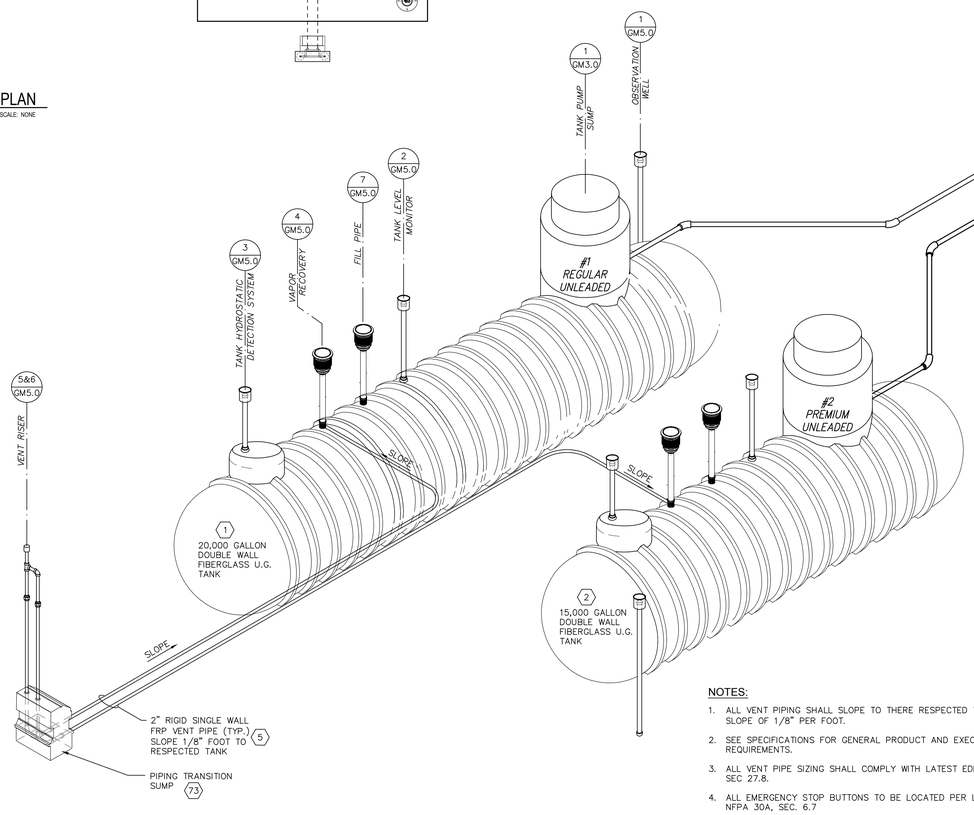

NOTES:

1. ALL VENT PIPING SHALL SLOPE TO THERE RESPECTED TANK AT A MINIMUM SLOPE OF 1/8" PER FOOT.
2. SEE SPECIFICATIONS FOR GENERAL PRODUCT AND EXECUTION REQUIREMENTS.
3. ALL VENT PIPE SIZING SHALL COMPLY WITH LATEST EDITION OF NFPA 30, SEC 27.8.
4. ALL EMERGENCY STOP BUTTONS TO BE LOCATED PER LATEST EDITION OF NFPA 30A, SEC. 6.7

CONTRACTOR EXPERIENCE AND LICENSING:

1. CONTRACTOR SHALL CERTIFY THAT HE (OR HIS INSTALLATION SUB-CONTRACTOR) HAS AT LEAST FOUR YEARS EXPERIENCE INSTALLING UNDERGROUND GASOLINE STORAGE TANKS AND DISPENSING EQUIPMENT AND HOLDS ALL CERTIFICATIONS OR LICENSES REQUIRED BY THE STATE IN WHICH THE PROJECT IS TO BE CONSTRUCTED. HE SHALL ALSO ASSURE THAT THE DESIGNED GASOLINE FUEL SYSTEM SHALL BE INSTALLED BY SKILLED WORKMEN, LICENSED BY THE STATE IN WHICH THE PROJECT IS CONSTRUCTED AND CERTIFIED BY THE EQUIPMENT MANUFACTURERS. CONTRACTOR'S FUEL SYSTEM INSTALLER AND ELECTRICIAN SHALL HAVE PRIOR EXPERIENCE WITH FUEL SYSTEMS AND RELATED EQUIPMENT. AS EVIDENCE OF THIS EXPERIENCE, A LIST OF THE MOST RECENT THREE FUEL SYSTEM INSTALLATIONS PERFORMED BY THIS CONTRACTOR WITH COMPLETE DESCRIPTIONS OF THE LOCATION, THE PROJECT NAME, AND THE EQUIPMENT INSTALLED AND DATE OF PROJECT SHALL BE SUBMITTED TO THE CONTRACTING OFFICER PRIOR TO AWARD OF CONTRACT.

   CONTRACTOR CERTIFICATION OF LICENSING AND EXPERIENCE. CONTRACTOR SHALL CERTIFY THAT HE (OR HIS INSTALLATION SUBCONTRACTOR IS A CERTIFIED INSTALLER AND/OR AUTHORIZED SERVICE CONTRACTOR FOR THE FOLLOWING EQUIPMENT MANUFACTURERS, AS APPLICABLE TO THE SYSTEM BEING INSTALLED:

   a. DRESSER WAYNE.
   b. VEEDER-ROOT
   c. RED JACKET
   d. OPW
   e. CONTAINMENT SOLUTIONS / XERXES
   f. AMERON INTERNATIONAL
2. CONTRACTOR SHALL ALSO CERTIFY THAT HE (OR HIS INSTALLATION SUBCONTRACTOR) HOLDS ALL NECESSARY LICENSES AND MANUFACTURER CERTIFICATIONS FOR CONSTRUCTION AND INSTALLATION REQUIRED UNDER THIS CONTRACT AT THE PROJECT LOCATION. THESE CERTIFICATIONS SHALL BE SUBMITTED IN WRITING TO THE CONTRACTING OFFICER BEFORE AWARD OF CONTRACT. CHANGING OF SUBCONTRACTORS AFTER THIS CERTIFICATION WILL REQUIRE RE-CERTIFICATION OF THE NEW SUBCONTRACTOR, SHOWING REQUISITE EXPERIENCE AND RESUBMITTAL TO THE CONTRACTING OFFICER PRIOR TO THE NEW SUBCONTRACTOR PERFORMING ANY WORK ON THE JOBSITE.
3. CONTRACTOR SHALL CERTIFY THAT THE INSTALLATION OF THE PETROLEUM-SYSTEM-RELATED ELECTRICAL COMPONENTS WILL BE DONE BY AN EXPERIENCED CONTRACTOR OR SUBCONTRACTOR. THIS PETROLEUM ELECTRICAL CONTRACTOR SHALL HAVE FUEL ELECTRICAL SYSTEM EXPERIENCE WITH SYSTEMS SIMILAR TO THOSE INSTALLED UNDER THIS CONTRACT. (PETROLEUM-SYSTEM-RELATED COMPONENTS ARE THOSE ESSENTIAL TO THE LEGAL OPERATION OF THE PETROLEUM STORAGE, DISPENSING, LEAK DETECTION, AND EMERGENCY EQUIPMENT. THEY INCLUDE, BUT ARE NOT LIMITED TO: DISPENSERS, SUBMERSIBLE PUMPS, PUMP CONTROLLERS, LEAK DETECTION EQUIPMENT, VAPOR RECOVERY SYSTEMS, EMERGENCY SHUT-OFF SWITCHES, AND ALL CONDUIT RELATED TO THESE SYSTEMS.) AS EVIDENCE OF THIS EXPERIENCE, A LIST OF THE MOST RECENT FIVE FUEL SYSTEM INSTALLATIONS PERFORMED BY THIS CONTRACTOR WITH COMPLETE DESCRIPTIONS OF THE LOCATION, THE PROJECT NAME, AND THE EQUIPMENT INSTALLED AND DATE OF PROJECT SHALL BE SUBMITTED TO THE CONTRACTING OFFICER BEFORE CONSTRUCTION BEGINS. NOTE: IT IS PREFERRED BUT NOT MANDATORY THAT THE PETROLEUM ELECTRICAL SUBCONTRACTOR BE A SUBCONTRACTOR TO THE PETROLEUM SYSTEM INSTALLER. IF THE PETROLEUM ELECTRICAL INSTALLER IS A SUBCONTRACTOR OF THE PETROLEUM SYSTEMS INSTALLER DESCRIBED IN 1, ABOVE, AND WORKED ON THE PROJECTS SUBMITTED UNDER THAT PARAGRAPH, CONTRACTOR SHALL SO CERTIFY AND NO ADDITIONAL PROJECTS NEED BE REPORTED.
4. THE LICENSED, EXPERIENCED AND MANUFACTURER-CERTIFIED FUEL SYSTEM INSTALLERS DESCRIBED IN B. 1-3 ABOVE SHALL REMAIN ON-SITE DURING ALL ACTIVE PHASES OF THE FUEL SYSTEM INSTALLATION. UNLICENSED, UN-EXPERIENCED AND NON-MANUFACTURER-CERTIFIED LABORERS MAY NOT PERFORM SUBSTANTIAL WORK WITHOUT A LICENSED, EXPERIENCED AND MANUFACTURER-CERTIFIED FUEL SYSTEM INSTALLER PRESENT."

EXCHANGE™

DATE	REVISION NO. & DESCRIPTION

GENERAL NOTE:
THESE DRAWINGS APPLY TO FACILITIES SUCH AS SHOPPETTES AND EXCHANGES WHICH ARE EXEMPT FROM THE FEDERAL ACQUISITION REGULATION (FAR) REQUIREMENTS

NOTE TO A/E:
THESE ARE PROTOTYPE DRAWINGS

These drawings, details, notes, specifications and calculations are incomplete and generic in nature. They are not intended for site-specific conditions as-is. Morris and Associates, Engineers, Inc., and its' consultants does not warrant or guarantee the accuracy or applicability of these documents to the requirements of your project, current codes or local conditions. The A/E is responsible to secure the services of an appropriately experienced and licensed professional, as applicable, to determine any code or site-specific requirements and review, update and modify the documents as required for each specific project.

DRAWN BY: SR
CHECKED BY: JL
DATE: –

FIRM #1440
morris + associates
Build on Our Strengths
12715 TELGE ROAD
CYPRESS, TX. 77429
(281) 855-6433
(281) 858-4004 FAX
© 2014
All rights reserved.

PROJECT:
UST STANDARDS
AMERON PIPING OPTION

DRAWING TITLE:
PETROLEUM
PIPING PLAN AND
ISOMETRIC

DATE:	SCALE:	SHEET:
08/18/14	AS SHOWN	GM1.0
DRAWING/PROJECT NO: -		OF___

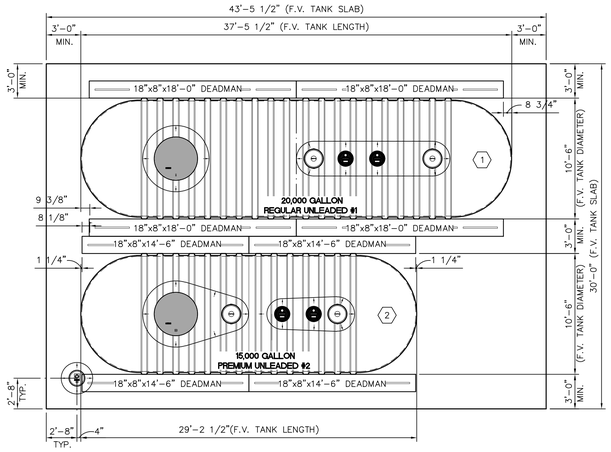

1 UNDERGROUND STORAGE TANK PLAN

SCALE: 3/16" = 1'-0"

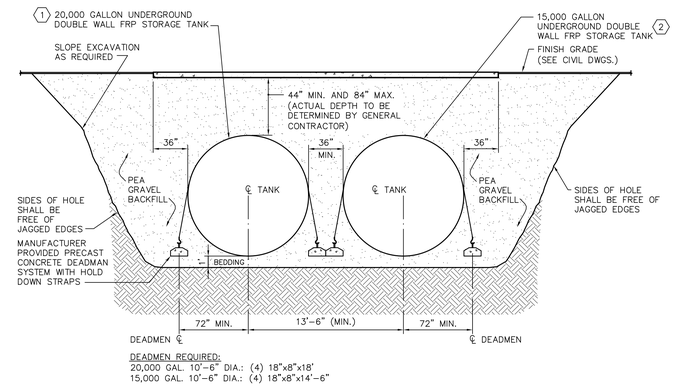

2 SECTION AT UNDERGROUND STORAGE TANKS

SCALE: NONE

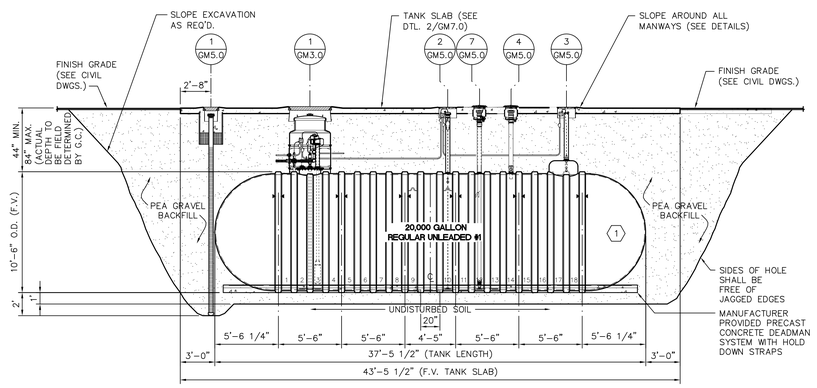

REGULAR UNLEADED TANK - STAGE I VAPOR RECOVERY
3 SECTION AT 20,000 GALLON DOUBLE WALL FIBERGLASS UNDERGROUND STORAGE TANK

SCALE: NONE

4 NOT USED

SCALE: NONE

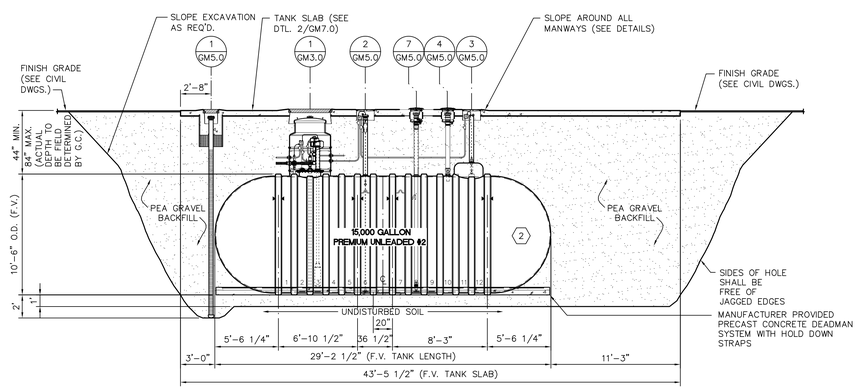

PREMIUM UNLEADED TANK - STAGE I VAPOR RECOVERY
5 SECTION AT 15,000 GALLON DOUBLE WALL FIBERGLASS UNDERGROUND STORAGE TANK

SCALE: NONE

6 NOT USED

NO SCALE

EXCHANGE™

DATE	REVISION NO. & DESCRIPTION

GENERAL NOTE:
THESE DRAWINGS APPLY TO FACILITIES SUCH AS SHOPPETTES AND EXCHANGES WHICH ARE EXEMPT FROM THE FEDERAL ACQUISITION REGULATION (FAR) REQUIREMENTS

NOTE TO A/E:
THESE ARE PROTOTYPE DRAWINGS

These drawings, details, notes, specifications and calculations are incomplete and generic in nature. They are not intended for site-specific conditions as-is. Morris and Associates, Engineers, Inc., and its' consultants does not warrant or guarantee the accuracy or applicability of these documents to the requirements of your project, current codes or local conditions. The A/E is responsible to secure the services of an appropriately experienced and licensed professional, as applicable, to determine any code or site-specific requirements and review, update and modify the documents as required for each specific project.

DRAWN BY: SR
CHECKED BY: JL
DATE: –

FIRM #1440
morris+associates
Build on Our Strengths
12715 TELGE ROAD
CYPRESS, TX. 77429
(281) 855-6433
(281) 858-4304 FAX
© 2014 Morris+Associates, Engineers, Inc. All rights reserved.

PROJECT:
UST STANDARDS
AMERON PIPING OPTION

DRAWING TITLE:
UST'S PLAN & SECTIONS

DATE:	SCALE:	SHEET:
08/18/14	AS SHOWN	GM2.0
DRAWING/PROJECT NO: -		OF

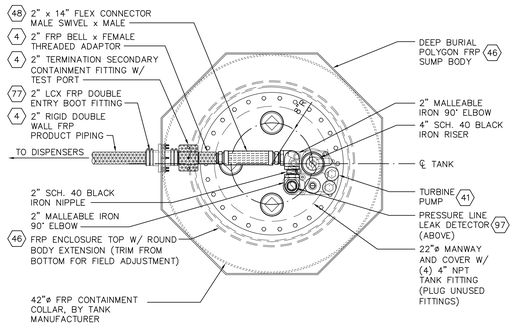

PLAN VIEW AT MANWAY

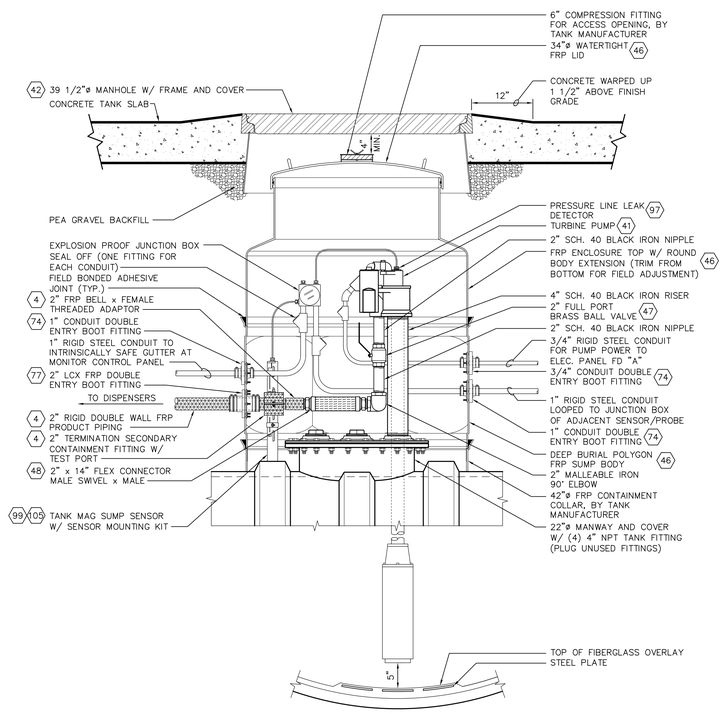

SECTION

1 SUBMERGED PUMP SUMP DETAIL

SCALE: NONE

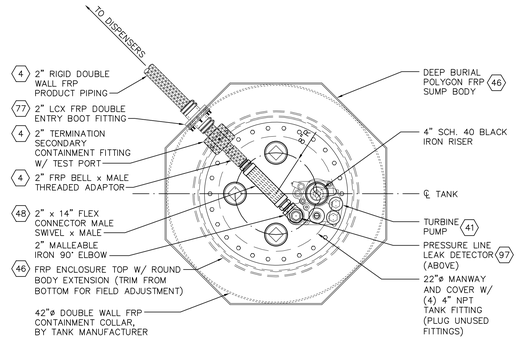

PLAN VIEW AT MANWAY

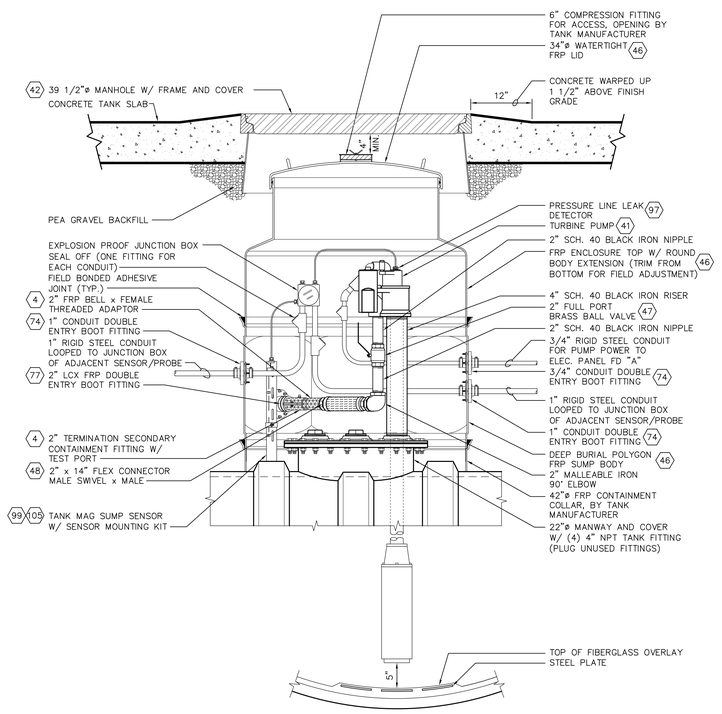

SECTION

2 SUBMERGED PUMP SUMP DETAIL

SCALE: NONE

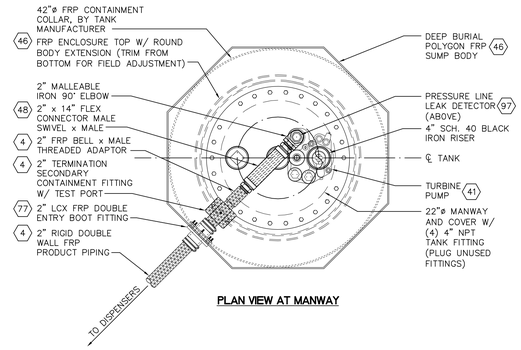

PLAN VIEW AT MANWAY

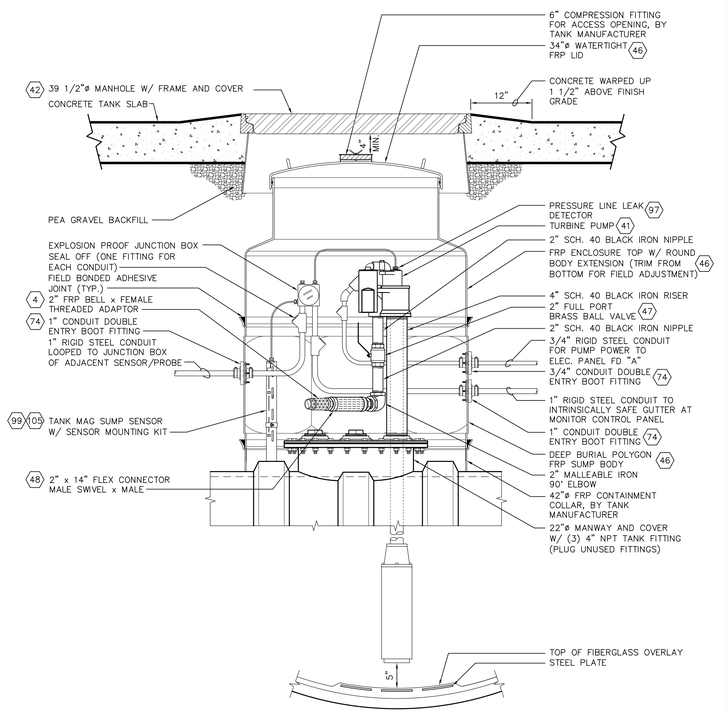

SECTION

3 SUBMERGED PUMP SUMP DETAIL

SCALE: NONE

EXCHANGE™

DATE	REVISION NO. & DESCRIPTION

GENERAL NOTE:
THESE DRAWINGS APPLY TO FACILITIES SUCH AS SHOPPETTES AND EXCHANGES WHICH ARE EXEMPT FROM THE FEDERAL ACQUISITION REGULATION (FAR) REQUIREMENTS

NOTE TO A/E:
THESE ARE PROTOTYPE DRAWINGS

These drawings, details, notes, specifications and calculations are incomplete and generic in nature. They are not intended for site-specific conditions as-is. Morris and Associates, Engineers, Inc., and its consultants does not warrant or guarantee the accuracy or applicability of these documents to the requirements of your project, current codes or local conditions. The A/E is responsible to secure the services of an appropriately experienced and licensed professional, as applicable, to determine any code or site-specific requirements and review, update and modify the documents as required for each specific project.

DRAWN BY: SR
CHECKED BY: JL
DATE: –

FIRM #1449
morris + associates
Build on Our Strengths
12715 TELGE ROAD
CYPRESS, TX. 77429
(281) 855-6433
(281) 858-4504 FAX

© 2014
Morris & Associates, Engineers, Inc.
All rights reserved.

PROJECT:
UST STANDARDS
AMERON PIPING OPTION

DRAWING TITLE:
SUBMERGED PUMP SUMP DETAILS

DATE:	SCALE:	SHEET:
08/18/14	AS SHOWN	GM3.0
DRAWING/PROJECT NO: –		OF

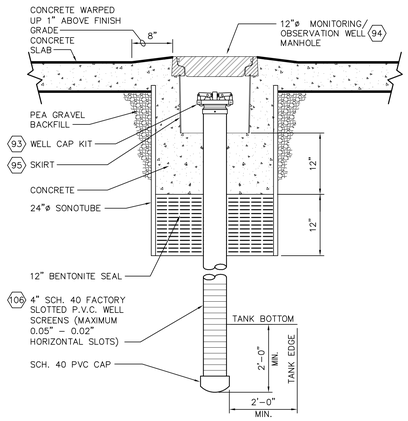

1 OBSERVATION / MONITOR WELL DETAIL

SCALE: NONE

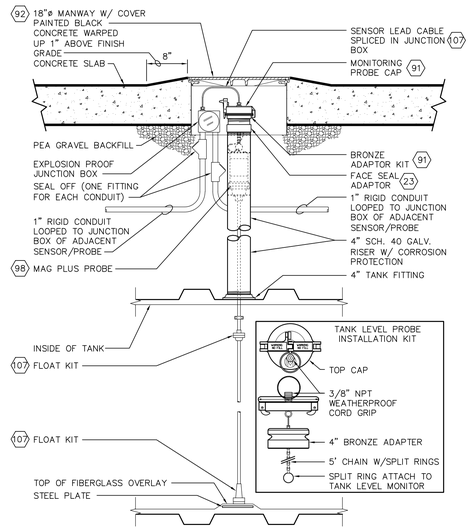

2 TANK LEVEL MONITOR (TLM) DETAIL

SCALE: NONE

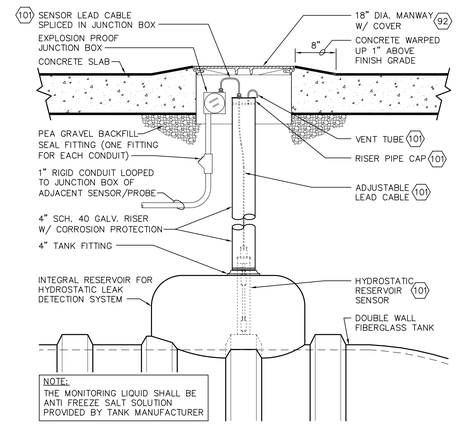

3 TANK HYDROSTATIC DETECTION SYSTEM DETAIL

SCALE: NONE

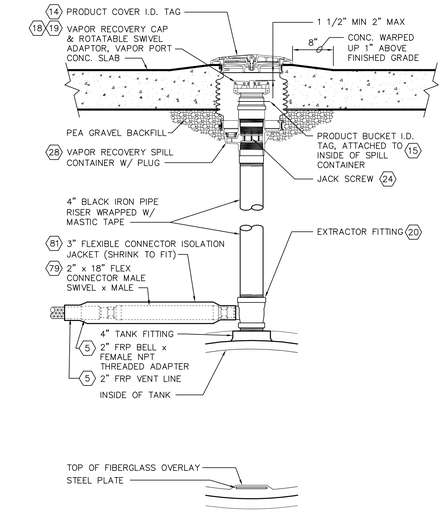

4 VENT/VAPOR & EXTRACTOR ASSEMBLIES DETAIL

SCALE: NONE

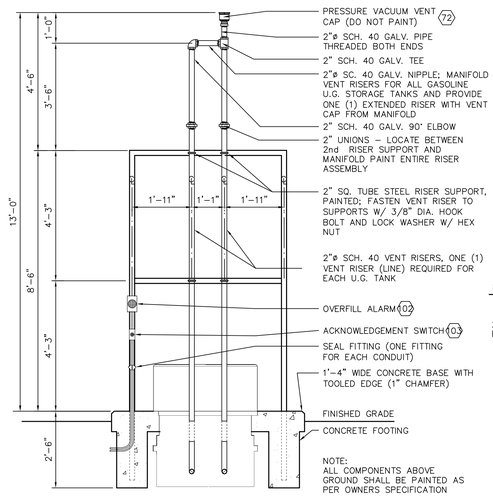

ELEVATION

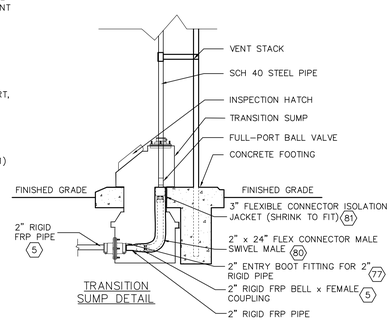

TRANSITION SUMP DETAIL

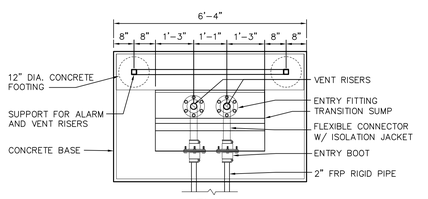

PLAN

5 VENT RISER DETAIL FOR TWO TANKS

SCALE: NONE

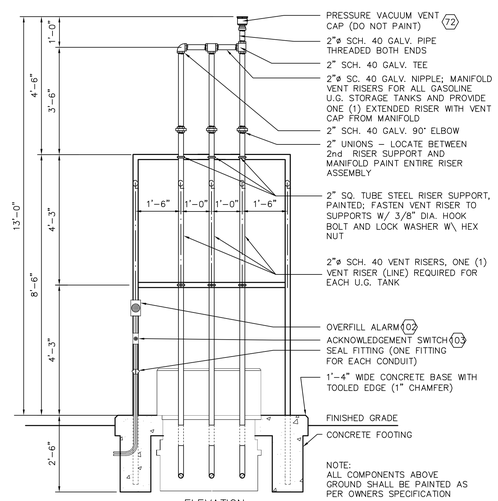

ELEVATION

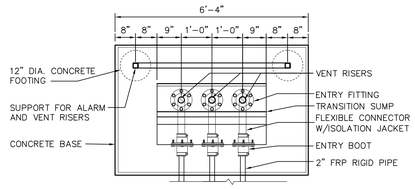

PLAN

6 VENT RISER DETAIL FOR THREE TANKS

SCALE: NONE

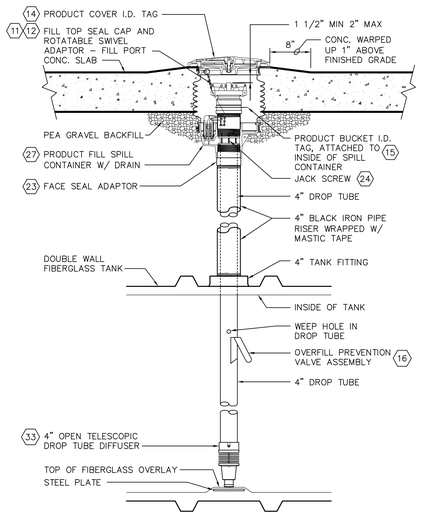

7 FILL PIPE DETAIL

SCALE: NONE

EXCHANGE™

DATE	REVISION NO. & DESCRIPTION

GENERAL NOTE:
THESE DRAWINGS APPLY TO FACILITIES SUCH AS SHOPPETTES AND EXCHANGES WHICH ARE EXEMPT FROM THE FEDERAL ACQUISITION REGULATION (FAR) REQUIREMENTS

NOTE TO A/E:
THESE ARE PROTOTYPE DRAWINGS

These drawings, details, notes, specifications and calculations are incomplete and generic in nature. They are not intended for site-specific conditions as-is. Morris and Associates, Engineers, Inc., and its' consultants does not warrant or guarantee the accuracy or applicability of these documents to the requirements of your project, current codes or local conditions. The A/E is responsible to secure the services of an appropriately experienced and licensed professional, as applicable, to determine any code or site-specific requirements and review, update and modify the documents as required for each specific project.

DRAWN BY: SR
CHECKED BY: JL
DATE: –

FIRM #F1449
morris+associates
Build on Our Strengths
12715 TELGE ROAD
CYPRESS, TX. 77429
(281) 858-6433
(281) 858-4304 FAX

© 2014
Morris & Associates, Engineers, Inc.
All rights reserved.

PROJECT:
UST STANDARDS
AMERON PIPING OPTION

DRAWING TITLE:
MISCELLANEOUS TANK DETAILS

DATE:	SCALE:	SHEET:
08/18/14	AS SHOWN	GM5.0
DRAWING/PROJECT NO: –		OF

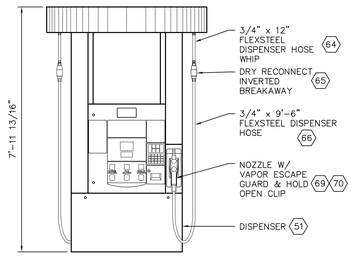

NOTE:

1. DISPENSERS SHOWN HAVE A TOP HOSE MOUNT.
2. PRODUCT PIPING MUST ALWAYS PENETRATE THE DISPENSER SUMP FROM THE OPPOSITE SIDE OF THE ELECTRICAL CONDUITS.
3. DISPENSER TO BE PROVIDED BY AAFES; DISPENSER HARDWARE TO BE PROVIDED BY CONTRACTOR.

1 DRESSER WAYNE DISPENSER ELEVATION - MODEL B12

SCALE: NONE

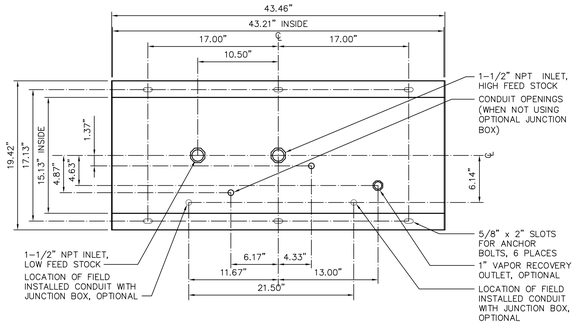

2 DRESSER WAYNE DISPENSER BASE - MODEL B12

SCALE: NONE

NOTE:
PROVIDE FLEXIBLE CONNECTORS AND SHEAR VALVE ASSEMBLIES AT PRODUCT CONNECTIONS TO GASOLINE DISPENSERS

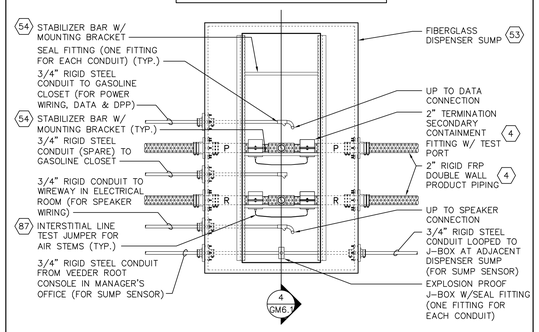

3 DISPENSER SUMP PIPING PLAN - MODEL B12

SCALE: NONE

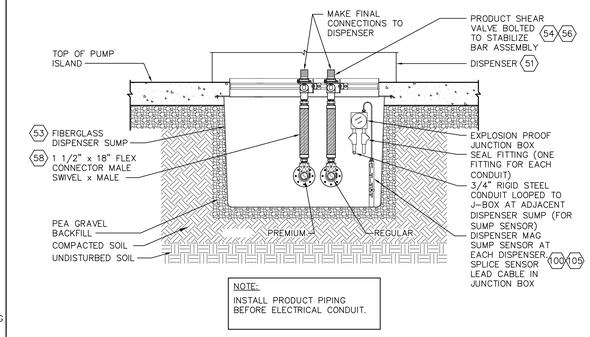

NOTE:
INSTALL PRODUCT PIPING BEFORE ELECTRICAL CONDUIT.

4 SECTION THRU DISPENSER SUMP - MODEL B12

SCALE: NONE

NOTE:
PROVIDE FLEXIBLE CONNECTORS AND SHEAR VALVE ASSEMBLIES AT PRODUCT CONNECTIONS TO GASOLINE DISPENSERS

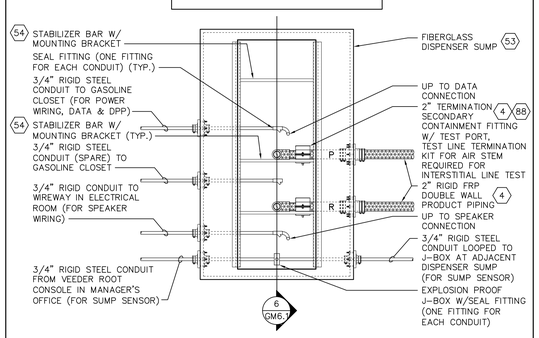

5 DISPENSER SUMP PIPING PLAN - MODEL B12

SCALE: NONE

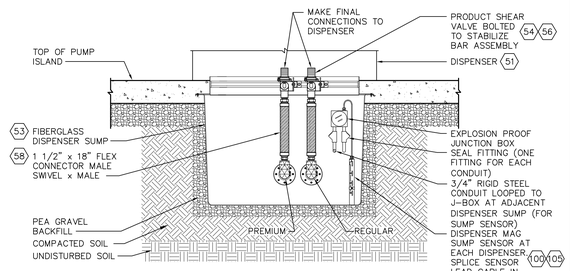

NOTE:
INSTALL PRODUCT PIPING BEFORE ELECTRICAL CONDUIT.

6 SECTION THRU DISPENSER SUMP - MODEL B12

SCALE: NONE

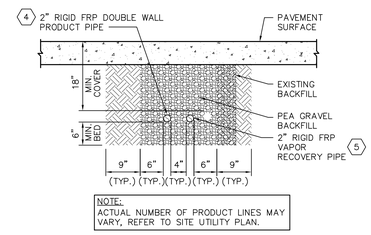

NOTE:
ACTUAL NUMBER OF PRODUCT LINES MAY VARY, REFER TO SITE UTILITY PLAN.

7 TYPICAL PIPE TRENCH PAVEMENT SECTION

SCALE: NONE

8 NOT USED

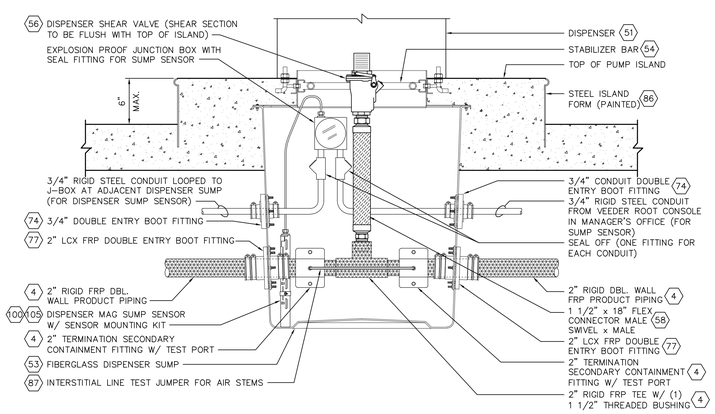

9 DISPENSER SUMP PRODUCT PIPING SECTION

SCALE: NONE

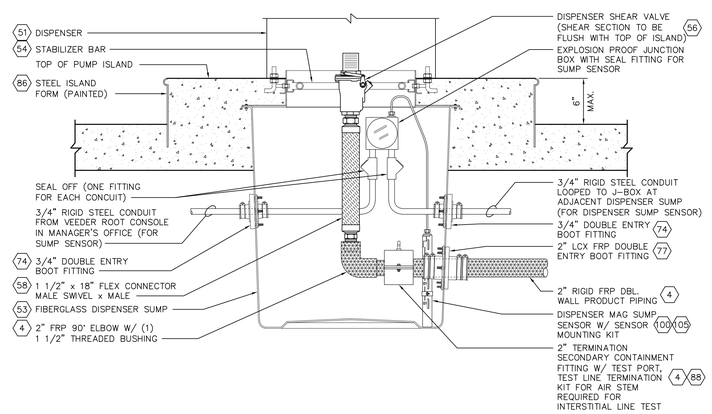

10 DISPENSER SUMP PRODUCT PIPING SECTION

SCALE: NONE

11 NOT USED

SCALE: NONE

EXCHANGE™

DATE	REVISION NO. & DESCRIPTION

GENERAL NOTE:
THESE DRAWINGS APPLY TO FACILITIES SUCH AS SHOPPETTES AND EXCHANGES WHICH ARE EXEMPT FROM THE FEDERAL ACQUISITION REGULATION (FAR) REQUIREMENTS

NOTE TO A/E:
THESE ARE PROTOTYPE DRAWINGS

These drawings, details, notes, specifications and calculations are incomplete and generic in nature. They are not intended for site-specific conditions as-is. Morris and Associates, Engineers, Inc., and its consultants does not warrant or guarantee the accuracy or applicability of these documents to the requirements of your project, current codes or local conditions. The A/E is responsible to secure the services of an appropriately experienced and licensed professional, as applicable, to determine any code or site-specific requirements and review, update and modify the documents as required for each specific project.

DRAWN BY: SR
CHECKED BY: JL
DATE: –

FIRM #1445
morris+associates
Build on Our Strengths
12715 TELGE ROAD
CYPRESS, TX. 77429
(281) 855-6433
(281) 858-4204 FAX

© 2014 Morris & Associates, Engineers, Inc. All rights reserved.

PROJECT:
UST STANDARDS
AMERON PIPING OPTION

DRAWING TITLE:
DISPENSER DETAILS

DATE:	SCALE:	SHEET:
08/18/14	AS SHOWN	GM6.0
DRAWING/PROJECT NO: –		OF

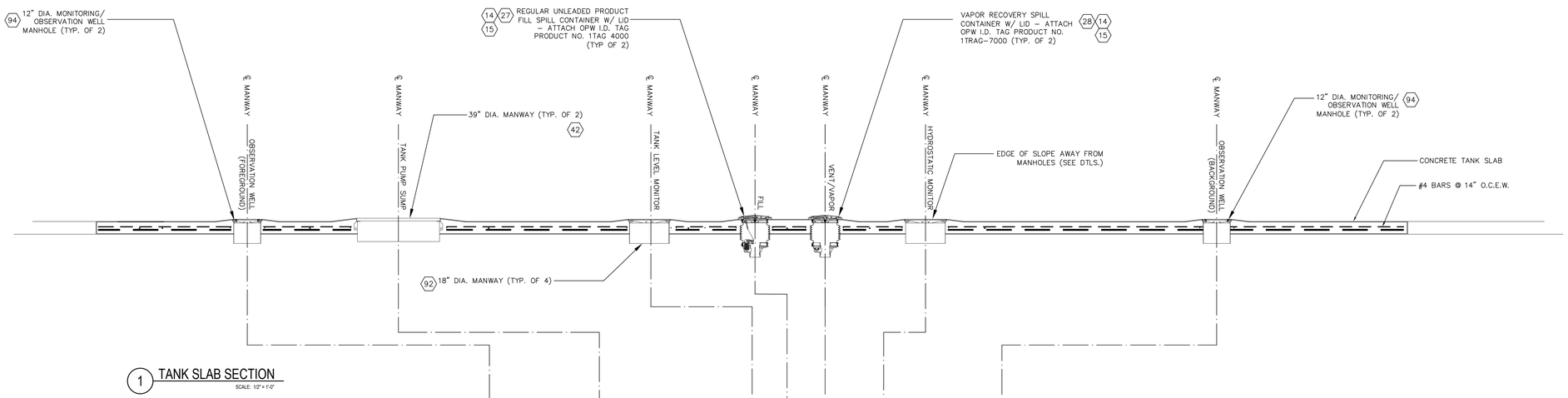

1 TANK SLAB SECTION

SCALE 1/2" = 1'-0"

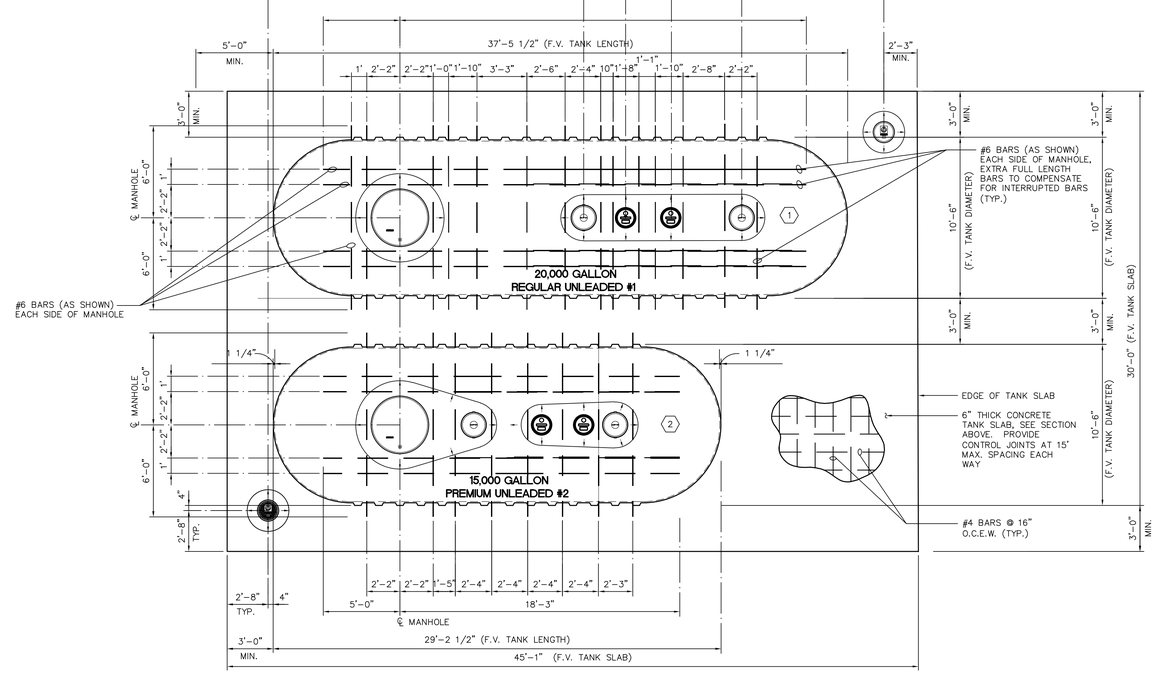

2 TANK SLAB REINFORCING PLAN

SCALE: 1/4" = 1'-0"

EXCHANGE™

DATE	REVISION NO. & DESCRIPTION

GENERAL NOTE:
THESE DRAWINGS APPLY TO FACILITIES SUCH AS SHOPPETTES AND EXCHANGES WHICH ARE EXEMPT FROM THE FEDERAL ACQUISITION REGULATION (FAR) REQUIREMENTS

NOTE TO A/E:
THESE ARE PROTOTYPE DRAWINGS

These drawings, details, notes, specifications and calculations are incomplete and generic in nature. They are not intended for site-specific conditions as-is. Morris and Associates, Engineers, Inc., and its' consultants does not warrant or guarantee the accuracy or applicability of these documents to the requirements of your project, current codes or local conditions. The A/E is responsible to secure the services of an appropriately experienced and licensed professional, as applicable, to determine any code or site-specific requirements and review, update and modify the documents as required for each specific project.

DRAWN BY: SR

CHECKED BY: JL

DATE: –

FIRM #1449
morris+associates
Build on Our Strengths
12715 TELGE ROAD
CYPRESS, TX. 77429
(281) 855-6433
(281) 858-4304 FAX

© 2014
Morris & Associates, Engineers, Inc.
All rights reserved.

PROJECT:

UST STANDARDS
AMERON PIPING OPTION

DRAWING TITLE:

TANK SLAB
REINFORCING PLAN
AND SECTION

DATE:	SCALE:	SHEET:
08/18/14	AS SHOWN	GM7.0
DRAWING/PROJECT NO: –		OF

BILL OF MATERIALS

#	PART DESCRIPTION	STANDARD	FURN.	INST.
	PRODUCT TANKS			
1	20,000 GALLON DOUBLE WALL FIBERGLASS UNDERGROUND STORAGE TANK	CONTAINMENT SOLUTIONS, INC.: (10')– 20,000; (1) 22" MANWAY W/ (4) NPT FITTINGS (PATTERN "F") W/ 42" FRP CONTAINMENT COLLAR; (3) 4" NPT FTG.; (1) HYDROSTATIC RESERVOIR; HOLD STRAPS & DEADMEN	GC	GC
2	15,000 GALLON DOUBLE WALL FIBERGLASS UNDERGROUND STORAGE TANK	CONTAINMENT SOLUTIONS, INC.: (10')– 15,000; (1) 22" MANWAY W/ (4) NPT FITTINGS (PATTERN "F") W/ 42" FRP CONTAINMENT COLLAR; (3) 4" NPT FTG.; (1) HYDROSTATIC RESERVOIR; HOLD STRAPS & DEADMEN	GC	GC
3				
	PRODUCT PIPING			
4	2" RIGID DBL WALL FRP PRODUCT PIPING W/ BONDED CLAMSHELL FTG.	AMERON: DUALOY 3000/LCX	GC	GC
5	2" RIGID SINGLE WALL FRP VENT/VAPOR RECOVERY PIPING & FITTINGS	AMERON: DUALOY 3000/L	GC	GC
6				
7				
8				
9				
10				
	FILL/VAPOR			
11	TIGHT–FILL TOP–SEAL CAP	OPW: 634TT–7085–EVR	GC	GC
12	TIGHT–FILL TOP SEAL ADAPTOR	OPW: 61SALP–1020–EVR	GC	GC
13				
14	PRODUCT COVER I. D. TAG	OPW: 1TAG–X000	GC	GC
15	PRODUCT BUCKET I. D. TAG	OPW: 1TAG–X010	GC	GC
16	OVERFILL PREVENTION VALVE ASSEMBLY	OPW: 71SO–410C	GC	GC
17				
18	STAGE 1 VAPOR RECOVERY CAP	OPW: 1711T–7085–EVR	GC	GC
19	STAGE 1 VAPOR RECOVERY ADAPTOR	OPW: 61VSA–1020–EVR	GC	GC
20	EXTRACTOR FITTING	OPW: 233–4420 (TEE)	GC	GC
21				
22				
23	THREADED RISER ADAPTOR (FACE SEAL ADAPTOR)	OPW: FSA–400	GC	GC
24	JACK SCREW	OPW: 61JSK–44CB	GC	GC
25			GC	GC
26				
27	SPILL BUCKET W/DRAIN VALVE	OPW: 1C–2100–DEVR	GC	GC
28	VAPOR RECOVERY SPILL BUCKET W/PLUG	OPW: 1C–2100C–PEVR	GC	GC
29				
30	RISER SPACER	POMECO/OPW: 6511–RB16	GC	GC
31	5–GALLON SHROUD BOOT	POMECO/OPW: D02575M	GC	GC
32	4" NIPPLE (4" LENGTH)	POMECO/OPW: H15144M	GC	GC
33	4" OPEN TELESCOPIC DROP TUBE DIFFUSER	MORRISON BRO: 5397O–0400 AD	GC	GC
34				
35	LOWER CLAMP FOR 5–GALLON SHROUD BOOT	POMECO/OPW: H15188M	GC	GC
36	UPPER CLAMP FOR 5–GALLON SHROUD BOOT	POMECO/OPW: H15190M	GC	GC
37				
38				
39				
40				
	TURBINE			
41	2 HP FIXED SPEED SUBMERSIBLE PUMP	RED JACKET: P200U1–3–RJ2/PN:410142–002 IQ CONTROL BOX	GC	GC
42	39 1/2" DIA. FLAT SEALED COMPOSITE COVER AND FRAME	OPW: 39CD–PL10	GC	GC
43				
44				
45				
* 46	DEEP BURIAL FRP POLYGON TANK SUMP W/ ROUND BODY EXTENSION W/ 34" DIA. LID	OPW/FLEXWORKS: TSDF–4536 @ RK5000	GC	GC
47	2" FULL PORT BRASS BALL VALVE	OPW: 21BV–0200	GC	GC
48	2" M SWIVEL x 2" M STAINLESS STEEL FLEXIBLE CONNECTOR	OPW/COMMANDO: FCW20–SWM14	GC	GC
49				
50				

#	PART DESCRIPTION	STANDARD	FURN.	INST.	
	DISPENSER				
51	MULTI–PRODUCT DISPENSER (3+0 BLEND)	DRESSER WAYNE: "OVATION" B12/3220D1/iJK	A	GC	
52					
53	FIBERGLASS DISPENSER SUMP	OPW/FLEXWORKS: DSF–1543	GC	GC	
54	STABILIZER BAR – FILL LINE	OPW/FLEXWORKS: SBK–1500	GC	GC	
55					
56	DISPENSER SHEAR VALVE – PRODUCT	OPW: 10P–0152	GC	GC	
57					
58	1 1/2"M SWIVEL x 1 1/2"M STAINLESS STEEL FLEXIBLE CONNECTOR	OPW/COMMANDO: FCW15–SWM18	GC	GC	
59					
60					
61					
62					
63	3/4"F x 3/4"M (NPT) HOSE SWIVEL	OPW: 241TPS–0241	GC	GC	
64	3/4"M x 3/4"M (NPT) x 9" STRAIGHTENING HOSE	OPW: 66H–0075	GC	GC	
65	3/4" (NPT) DRY RECONNECTABLE BREAKAWAY	OPW: 66REC–1000	GC	GC	
66	3/4" x 9'–0" FLEXSTEEL HARDWALL DISPENSER HOSE	GOODYEAR: GY–3409	GC	GC	
67					
68					
69	UNLEADED NOZZLE W/ HOLD OPEN RACK & TRIGGER	OPW: 11AP–0500 (BLUE)	GC	GC	
70	FILLGARD SPLASH GUARD	OPW: 8B–0500 (BLUE)	GC	GC	
	MISCELLANEOUS				
71	POWER DISTRIBUTION SYSTEM (SEE ELECTRICAL DWGS.)	POWER INTEGRITY: PDS–CH–AAFE42L	GC	GC	**
72	PRESSURE VACUUM VENT	OPW: 623V–2203	GC	GC	
73	VENT LINE TRANSITION SUMP	OPW: PTS–4021	GC	GC	
74	3/4" OR 1" CONDUIT DOUBLE ENTRY BOOT FITTING	OPW/FLEXWORKS: DEB–0751	GC	GC	
75	2" FRP DOUBLE ENTRY BOOT FITTING	OPW/FLEXWORKS: DEB–0200	GC	GC	
76					
77	2" LCX FRP DOUBLE ENTRY BOOT FITTING	OPW/FLEXWORKS: DEB–0200X	GC	GC	
78					
79	2" M SWIVEL x 2" M STAINLESS STEEL FLEXIBLE CONNECTOR	OPW: FC20–SWM18	GC	GC	
80	2" M SWIVEL x 2" M STAINLESS STEEL FLEXIBLE CONNECTOR	OPW: FC20–SWM24	GC	GC	
81	3" FLEXIBLE CONNECTOR ISOLATION JACKET (SHRINK TO FIT)	AUSTIN ENGINEERING, INC.: 3" FP1 SERIES	GC	GC	
82					
83	4" DIA. DOUBLE RADIUS PIPE GUARD	OPW: 6PGR4–4972	GC	GC	
84					
85					
86	STEEL ISLAND FORM(SUBSTITUTE STAINLESS STEEL IN NORTHERN REGIONS)	OPW: 6013–SFR6W4L12 (6013SS–SFR6W4L12)	GC	GC	
87	TEST JUMPER FOR AIR STEMS	OPW/FLEXWORK: TJ–200A	GC	GC	
88	TEST LINE TERMINATION KIT FOR AIR STEMS	OPW/FLEXWORK: TLT–36A	GC	GC	
89					
90					
	MONITORING				
91	MONITORING PROBE CAP W/BRONZE ADAPTOR KIT	OPW: 62MBB–0375	GC	GC	
92	18" DIA. MANWAY W/COVER	OPW: 104A–1800	GC	GC	
93	MONITORING WELL/PIPE CAP KIT	OPW: 634TTM–7087	GC	GC	
94	12" DIA. GRAY COVER & FRAME W/ MONITORING WELL ID PLATE	OPW: 104AOW–1200	GC	GC	
95	12" DEEP FRP SKIRT FOR FL120 COVER	OPW: 104FG–1200	GC	GC	
96	TLS–450 CONSOLE W/INTEGRAL PRINTER & FULL VGA LCD DISPLAY	VEEDER ROOT: 860090–100	GC	GC	**
97	DIGITAL PRESSURE LINE LEAK DETECTOR (DPLLD)	VEEDER ROOT: 859080–001	GC	GC	
98	MAG PLUS PROBE	VEEDER ROOT: 846390–109	GC	GC	
99	TANK MAG SUMP SENSOR (24" LENGTH)	VEEDER ROOT: 857080–112	GC	GC	
100	DISPENSER MAG SUMP SENSOR (12" LENGTH)	VEEDER ROOT: 857080–111	GC	GC	
101	HYDROSTATIC RESERVOIR SENSOR (DUAL FLOAT)	VEEDER ROOT: 794380–303	GC	GC	
102	OVERFILL ALARM	VEEDER ROOT: 790091–001	GC	GC	
103	ALARM ACKNOWLEDGMENT SWITCH	VEEDER ROOT: 790095–001	GC	GC	
104	DOUBLE WALL SUMP MINI HYDROSTATIC SENSOR	VEEDER ROOT: 794380–304	GC	GC	
105	UNIVERSAL SENSOR MOUNTING KIT	VEEDER ROOT: 330020–012	GC	GC	
106	4" SLOTTED PVC PIPE	OPW: 61SPVC–4015	GC	GC	
107	PHASE–TWO WATER DETECTOR FLOAT KIT (5' CABLE)	VEEDER ROOT: 886100–000	GC	GC	
108					

* SUMP LENGTH (L') TO BE FIELD DETERMINED BASED ON THE BURIAL DEPTH OF THE TANKS, BY THE GENERAL CONTRACTOR PRIOR TO PLACING ORDER. FOR 4' OF COVER L'=4', 5' OF COVER L'=5', 6' OF COVER L'=6' AND 7' OF COVER L'=7'.

** INDICATES ITEMS NOT SHOWN ON DRAWINGS, BUT REQUIRED.

EXCHANGE™

DATE	REVISION NO. & DESCRIPTION

GENERAL NOTE:
THESE DRAWINGS APPLY TO FACILITIES SUCH AS SHOPPETTES AND EXCHANGES WHICH ARE EXEMPT FROM THE FEDERAL ACQUISITION REGULATION (FAR) REQUIREMENTS

NOTE TO A/E:
THESE ARE PROTOTYPE DRAWINGS

These drawings, details, notes, specifications and calculations are incomplete and generic in nature. They are not intended for site–specific conditions as–is. Morris and Associates, Engineers, Inc., and its' consultants does not warrant or guarantee the accuracy or applicability of these documents to the requirements of your project, current codes or local conditions. The A/E is responsible to secure the services of an appropriately experienced and licensed professional, as applicable, to determine any code or site–specific requirements and review, update and modify the documents as required for each specific project.

DRAWN BY: SR
CHECKED BY: JL
DATE: –

FIRM #1449
morris+associates
Build on Our Strengths
12715 TELGE ROAD
CYPRESS, TX. 77429
(281) 855–6433
(281) 858–4304 FAX
© 2014 Morris & Associates, Engineers, Inc. All rights reserved.

PROJECT:
UST STANDARDS
AMERON PIPING OPTION

DRAWING TITLE:
BILL OF MATERIALS

DATE:	SCALE:	SHEET:
08/18/14	AS SHOWN	GM8.0
DRAWING/PROJECT NO: –		OF

PANELBOARD SCHEDULE – PANELBOARD FD 'A'

Voltage: 120/208 Mains: MLO Phase: 3 Branches Rated: 10,000 A.I.C.
Buss: 225 Spaces: 42 Panel Type: CH

NOTES	TERMINATION POINT	DESCRIPTION	LOAD	BREAKER	PHASE A	PHASE B	PHASE C		BREAKER	LOAD	DESCRIPTION	TERMINATION POINT	NOTES
	FACTORY WIRED	LIGHT CONTROL POWER	180	15–1	330			2	20–1	150	SITE CONTROLLER	TB6	P,E
S1	STAGE 1 CONTACTOR	CANOPY LIGHTS –1	910	20–1		910		4	FILLER	0	SPACE		
S2	STAGE 2 CONTACTOR	CANOPY LIGHTS –2	1200	20–1			1450	6	20–1	250	OVERFILL ALARM	BRANCH BREAKER	
S2	STAGE 2 CONTACTOR	CANOPY SIGNAGE	1500	20–1	1860			8	20–1	360	ELECTRONICS	FACTORY WIRED	P
		SPACE	0	FILLER		0		10	20–1	240	VEEDER ROOT & LLD TEST POWER		
		SPACE	0	FILLER			500	12	20–1	500	INTERCOM RECEPTACLE	TB6	P,E
	FACTORY WIRED	SUBFEED TO PANEL –B– PHASE –A– ONLY	9216	100–2	9216			14	FILLER	0	SPACE		
			0	100–2		0		16	FILLER	0	SPACE		
		SPACE	0	FILLER			1120	18	FILLER	0	SPACE		
L	FACTORY WIRED	E–STOP POWER	180	15–1	180			20	FILLER	0	SPACE		
		SPACE	0	FILLER		0		22	FILLER	0	SPACE		
		SPACE	0	FILLER			1248	24	20–2	2HP	STP #1	TB4	E,L
		SPACE	0	FILLER	1248			26					
		SPACE	0	FILLER		1248		28	20–2	2HP	STP #2	TB4	E,L
		SPACE	0	FILLER			1248	30					
	BRANCH BREAKER	CANOPY RECEPTACLES	1080	20–1	2328			32	20–2	2HP	STP #3	TB4	E,L
S2	STAGE 2 CONTACTOR	CANOPY SIGNAGE	1500	20–1		2748		34					
S2	STAGE 2 CONTACTOR	CANOPY SIGNAGE	1500	20–1			2748	36	FILLER	0	SPACE		
S2	STAGE 2 CONTACTOR	AIR/WATER STATION LIGHT	455	20–1	1703			38	FILLER	0	SPACE		
		SPACE	0	FILLER		1248		40	FILLER	0	SPACE		
	BRANCH BREAKER	AIR/WATER STATION	2400	25–1			3648	42	FILLER	0	SPACE		

PANELBOARD SCHEDULE – PANELBOARD FD 'B'

Voltage: 120 Mains: MLO Phase: 1** Branches Rated: 10,000 A.I.C.
Buss: 225 Spaces: 32 Panel Type: CH

NOTES	TERMINATION POINT	DESCRIPTION	LOAD	BREAKER	PHASE A	PHASE A		BREAKER	LOAD	DESCRIPTION	TERMINATION POINT	NOTES
	TB1	SWITCH NEUTRAL	0	SWN	768		2	20–SN	768	DISPENSER #1	TB1	P,E,L
P,E,L	TB1	DISPENSER #7	768	20–SN		768	4	SWN	0	SWITCH NEUTRAL	TB1	
	TB1	SWITCH NEUTRAL	0	SWN	768		6	20–SN	768	DISPENSER #2	TB1	P,E,L
P,E,L	TB1	DISPENSER #8	768	20–SN		768	8	SWN	0	SWITCH NEUTRAL	TB1	
					768		10	20–SN	768	DISPENSER #3	TB1	P,E,L
							12	SWN	0	SWITCH NEUTRAL	TB1	
					768		14	20–SN	768	DISPENSER #4	TB1	P,E,L
							16	SWN	0	SWITCH NEUTRAL	TB1	
					768		18	20–SN	768	DISPENSER #5	TB1	P,E,L
						768	20	SWN	0	SWITCH NEUTRAL	TB1	
					768		22	20–SN	768	DISPENSER #6	TB1	P,E,L
						768	24	SWN	0	SWITCH NEUTRAL	TB1	
							26					
							28					
							30					
							32					

PANEL NOTES

**	PANEL FED 120 VOLT.
S1	THIS CIRCUIT IS FOR STAGE 1 LIGHTING CONTROL (PHOTOCELL 1 ONLY).
S2	THIS CIRCUIT IS FOR STAGE 2 LIGHTING CONTROL (TIME CLOCK & PHOTOCELL 2 ONLY).
P	THIS CIRCUIT IS FOR ELECTRONIC EQUIPMENT AND REQUIRES A SERIES CONNECTED SURGE SUPPRESSOR. CIRCUIT IS PROTECTED BY A POWER INTEGRITY MODEL ZTAS–03–15–1.
E	THIS CIRCUIT IS DISCONNECTED WITH E–STOP CONTROLS
L	THIS CIRCUIT BREAKER IS PROVIDED WITH A PADLOCKABLE DEVICE

NOTE

THE POWER INTEGRITY "PETRO POWER CENTER" CONTAINS PANEL FD 'A' & FD 'B' AND THE ASSOCIATED CIRCUIT BREAKERS. THE POWER CENTER SHALL BE PROVIDED BY THE CONTRACTOR.

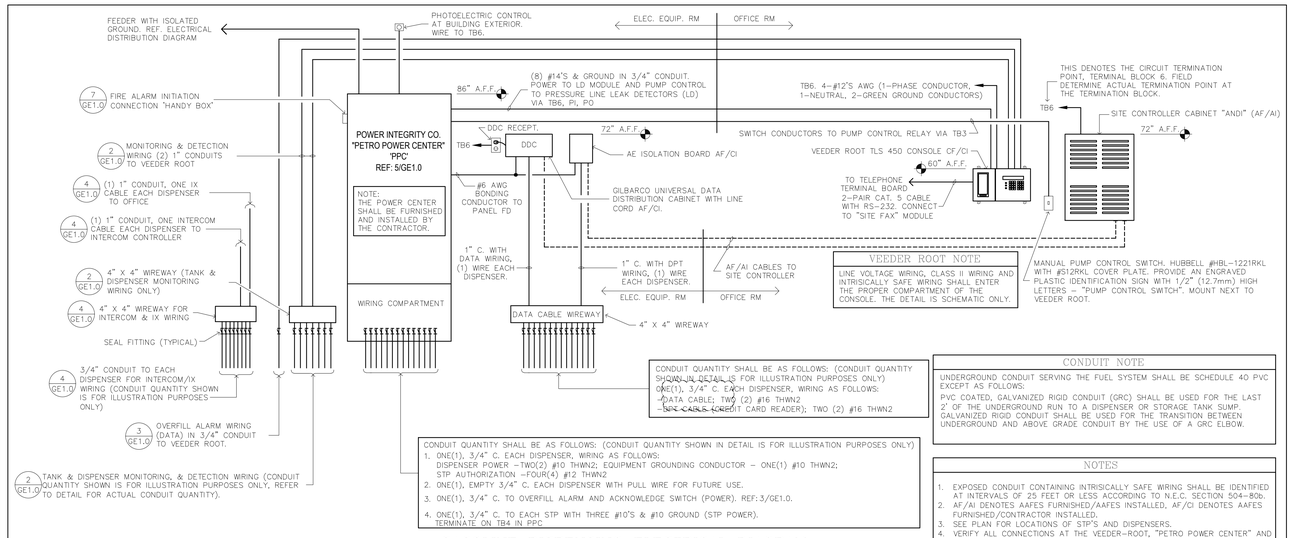

GASOLINE DISPENSING ELECTRICAL DIAGRAM 1 GE1.0
NOT TO SCALE

VEEDER ROOT NOTE

LINE VOLTAGE WIRING, CLASS II WIRING AND INTRINSICALLY SAFE WIRING SHALL ENTER THE PROPER COMPARTMENT OF THE CONSOLE. THE DETAIL IS SCHEMATIC ONLY.

MANUAL PUMP CONTROL SWITCH. HUBBELL #HBL–1221RKL WITH #512RKL COVER PLATE. PROVIDE AN ENGRAVED PLASTIC IDENTIFICATION SIGN WITH 1/2" (12.7mm) HIGH LETTERS – "PUMP CONTROL SWITCH". MOUNT NEXT TO VEEDER ROOT.

CONDUIT NOTE

UNDERGROUND CONDUIT SERVING THE FUEL SYSTEM SHALL BE SCHEDULE 40 PVC EXCEPT AS FOLLOWS:

PVC COATED, GALVANIZED RIGID CONDUIT (GRC) SHALL BE USED FOR THE LAST 2' OF THE UNDERGROUND RUN TO A DISPENSER OR STORAGE TANK SUMP. GALVANIZED RIGID CONDUIT SHALL BE USED FOR THE TRANSITION BETWEEN UNDERGROUND AND ABOVE GRADE CONDUIT BY THE USE OF A GRC ELBOW.

NOTES

1. EXPOSED CONDUIT CONTAINING INTRISICALLY SAFE WIRING SHALL BE IDENTIFIED AT INTERVALS OF 25 FEET OR LESS ACCORDING TO N.E.C. SECTION 504–80b.
2. AF/AI DENOTES AAFES FURNISHED/AAFES INSTALLED, AF/CI DENOTES AAFES FURNISHED/CONTRACTOR INSTALLED.
3. SEE PLAN FOR LOCATIONS OF STP'S AND DISPENSERS.
4. VERIFY ALL CONNECTIONS AT THE VEEDER–ROOT, "PETRO POWER CENTER" AND THE DISPENSERS WITH THE MANUFACTURER'S WIRING DIAGRAMS.

NOTE

WHERE CROSSING OTHER UTILITIES MAINTAIN 12" (304.8mm) CLEARANCE

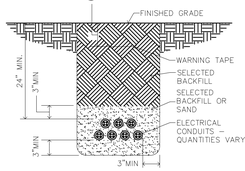

UNDERGROUND ELECTRICAL CONDUITS 9 GE1.0
NOT TO SCALE

EMERGENCY INSTRUCTIONS IN CASE OF FIRE OR SPILL: USE EMERGENCY STOP BUTTON (THIS WILL NOTIFY THE LOCAL FIRE DEPARTMENT)

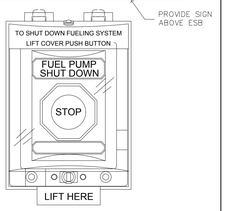

EXTERIOR EMERGENCY STOP BUTTON 8 GE1.0
NOT TO SCALE

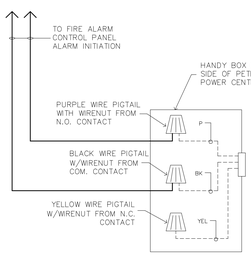

EMERGENCY STOP FIRE ALARM PANEL INTERFACE 7 GE1.0

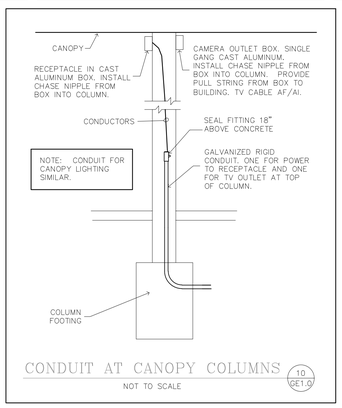

NOTE: CONDUIT FOR CANOPY LIGHTING SIMILAR.

CONDUIT AT CANOPY COLUMNS 10 GE1.0
NOT TO SCALE

LEGEND

DS	DISPENSER SUMP SENSOR
PS	PUMP SUMP SENSOR
TL	TANK LEVEL PROBE
LD	PRESSURE LINE LEAK DETECTOR
FS	FILL/VENT SUMP SENSOR
HS	HYDROSTATIC SUMP SENSOR
A	"BELDEN" #88760 JACKETED CABLE
J	NEMA 4X JUNCTION BOX

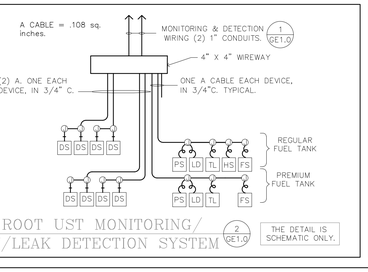

VEEDER ROOT UST MONITORING/ INVENTORY/LEAK DETECTION SYSTEM 2 GE1.0
THE DETAIL IS SCHEMATIC ONLY.

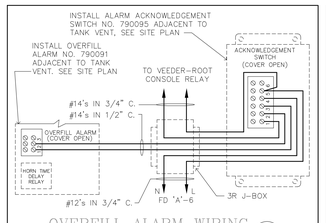

OVERFILL ALARM WIRING 3 GE1.0
NOT TO SCALE

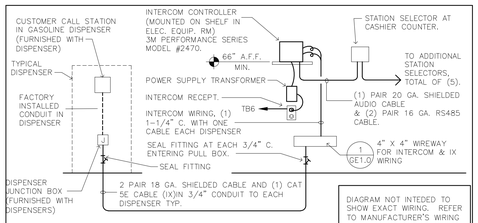

DIAGRAM NOT INTEDED TO SHOW EXACT WIRING. REFER TO MANUFACTURER'S WIRING DIAGRAMS.

INTERCOM & IX RISER WIRING 4 GE1.0
NOT TO SCALE

PUMP REMOTE CONTROL

THE POWER CENTER SHALL BE EQUIPPED WITH A PUMP RELAY THAT ALLOWS REMOTE MANUAL CONTROL OF ALL PUMPS. THE REMOTE CONTROL DEVICE SHALL BE A SINGLE–POLE SWITCH. SEE 1/GE1.0.

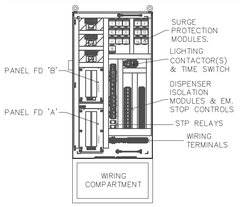

POWER CENTER LAYOUT 5 GE1.0
DISPENSER AND PUMP CONTROLS

POWER INTEGRITY SYSTEM INFORMATION

MODEL:	PDS–CH–AAFE10D3
DESCRIPTION:	CUSTOM 10 DISPENSER, 3 PRODUCT PUMP POWER DISTRIBUTION CENTER
CONSISTS OF:	–(1) PPC–CH–AAFE10D3–PRC –SURGE SUPPRESSOR MODULES FOR EACH DISPENSER AND EACH ELECTRONIC CIRCUIT. –PUMP REMOTE CONTROL RELAY –CANOPY LIGHTING CONTACTORS –LIGHTING CONTROL PROGRAMMABLE TIME SWITCH WITH PHOTOELECTRIC CONTROL
SYSTEM MFR.	POWER INTEGRITY CORPORATION

SYSTEM ACCESSORIES SHOWN (ORDER SEPARATE)

EMERGENCY STOP/RESET STATION (1) MODEL: IA–ESOR
EMERGENCY STOP STATION W/COVER, OUTDOOR RATED (AS REQ.) MODEL: IA–ESOC

NOTE

THE POWER INTEGRITY "PETRO POWER CENTER" CONTAINS PANEL "FD" AND THE ASSOCIATED CIRCUIT BREAKERS, THE STP RELAYS, COMPONENTS REQUIRED FOR THE EMERGENCY STOP SYSTEM, RELAYS REQUIRED FOR THE FIRE ALARM INTERFACE, DISPENSER ISOLATION MODULES AND SURGE SUPPRESSION MODULES. ALL DEVICES ARE FACTORY WIRED TO A TERMINAL FOR CONNECTION BY THE CONTRACTOR. THE CONTRACTOR SHALL TERMINATE CONDUCTORS PER THE MFR. WIRING DIAGRAM(S). THE POWER CENTER SHALL BE PROVIDED BY THE CONTRACTOR.

NOTE

FIELD VERIFY CONNECTIONS OF EMERGENCY PUSH BUTTONS AND FIRE ALARM WIRING WITH VENDORS' SHOP DRAWINGS.

EMERGENCY SHUTDOWN OPERATION

ACTIVATION OF ANY EMERGENCY STOP BUTTON SHALL DE–ENERGIZE EACH TURBINE PUMP, EACH DISPENSER, INTERCOM POWER AND SHALL INITIATE A FIRE ALARM. INITIATION OF A FIRE ALARM SHALL DE–ENERGIZE THE PUMPS, DISPENSERS AND THE INTERCOM POWER. PROVIDE THE REQUIRED ADDITIONS TO THE EXISTING FIRE ALARM CONTROL PANEL.

LEGEND

ESB1	EMERGENCY STOP BUTTON, RED MUSH–
ESB2	ROOM OPERATOR, NEMA 12 ENCLOSURE.
ESB3	LOCATE ESB1 AT CASHIER, ESB2 & ESB3 AT SIDES OF BUILDING. SEE SITE PLAN.

FIRE ALARM PANEL INTERFACE
FIRE ALARM WIRING TO BUILDING FIRE ALARM CONTROL PANEL. NORMALLY CLOSED DRY CONTACT RATED A MINIMUM OF 2 AMPS, 120VAC.

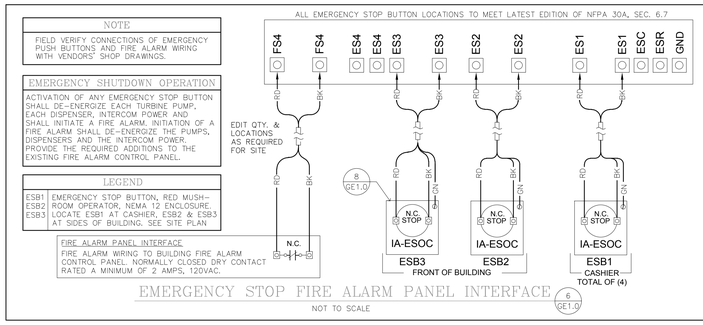

EMERGENCY STOP FIRE ALARM PANEL INTERFACE 6 GE1.0
NOT TO SCALE

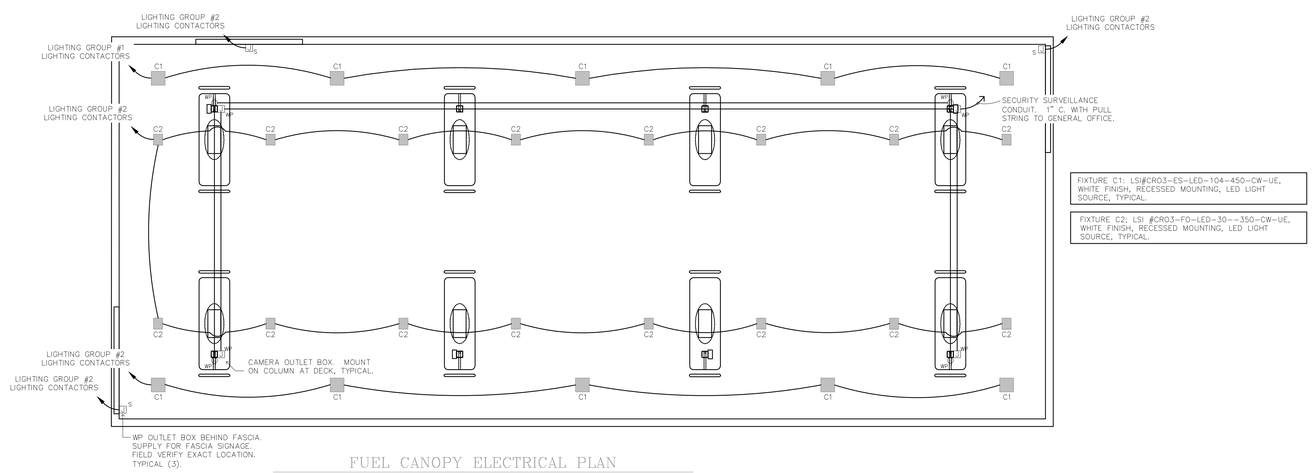

FIXTURE C1: LSI#CR03–ES–LED–104–450–CW–UE, WHITE FINISH, RECESSED MOUNTING, LED LIGHT SOURCE, TYPICAL.

FIXTURE C2: LSI #CR03–FO–LED–30––350–CW–UE, WHITE FINISH, RECESSED MOUNTING, LED LIGHT SOURCE, TYPICAL.

FUEL CANOPY ELECTRICAL PLAN
NOT TO SCALE

GROUNDING NOTE:
ALL CANOPIES TO BE GROUNDED PER UFC STANDARDS AND MEET LATEST EDITION NFPA 780 REQUIREMENTS

EXCHANGE™

DATE	REVISION NO. & DESCRIPTION

The LaRose Group LLC
MECHANICAL AND ELECTRICAL ENGINEERING
600 East Thorn Hot Drive Nixa, Missouri
MISSOURI LICENSE #E–2014032652

GENERAL NOTE:
THESE DRAWINGS APPLY TO FACILITIES SUCH AS SHOPPETTES AND EXCHANGES WHICH ARE EXEMPT FROM THE FEDERAL ACQUISITION REGULATION (FAR) REQUIREMENTS

NOTE TO A/E:
THESE ARE PROTOTYPE DRAWINGS

These drawings, details, notes, specifications and calculations are incomplete and generic in nature. They are not intended for site–specific conditions as–is. Morris and Associates, Engineers, Inc., and its' consultants does not warrant or guarantee the accuracy or applicability of these documents to the requirements of your project, current codes or local conditions. The A/E is responsible to secure the services of an appropriately experienced and licensed professional, as applicable, to determine any code or site–specific requirements and review, update and modify the documents as required for each specific project.

DRAWN BY: JLL
CHECKED BY: LRH
DATE: –

FIRM #TX1449
morris+associates
Build on Our Strengths
12715 TELGE ROAD
CYPRESS, TX. 77429
(281) 855–6433
(281) 856–4504 FAX

© 2015 Morris Associates, Engineers, Inc. All Rights Reserved.

PROJECT:
8 DISPENSER PROTOTYPE FUEL ELECTRICAL

DRAWING TITLE:
FUEL ELCTRICAL SCHEMATICS

DATE:	SCALE:	SHEET:
01/22/15	AS SHOWN	GE1.0
DRAWING/PROJECT NO: –		OF 1