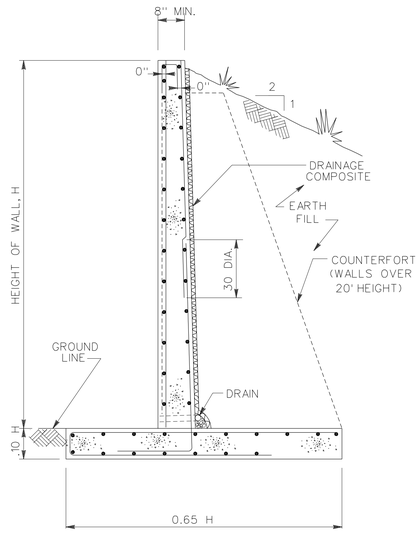

SECTION A
N.T.S.

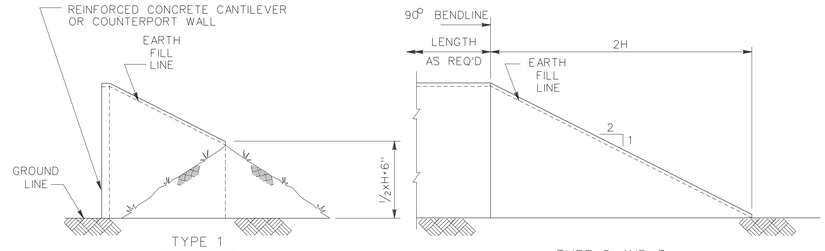

TYPE 1

TYPE 2 AND 3

END ELEVATION
N.T.S.

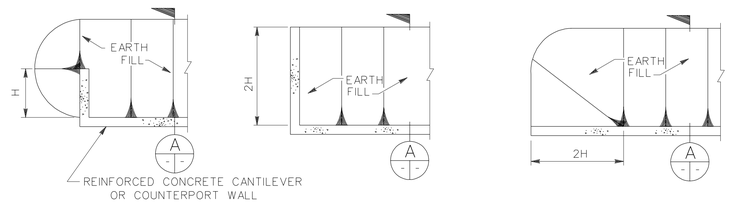

TYPE 1 | TYPE 2 | TYPE 3

END PLAN
N.T.S.

B13 - CANTILEVER RETAINING WALL

ESTIMATED COST, $			
PER LIN. FT. OF CROSS SECTION 15 FT. HIGH	LUMP SUM END		
	TYPE 1	TYPE 2	TYPE 3
355	5,600	6,300	7,400

ESTIMATED ERECTION TIME MANHOURS			
100 LIN. FT. OF CROSS SECTION 15 FT. HIGH	END TYPE 1	END TYPE 2	END TYPE 3
1,400	150	180	220

REMARKS:

1. REQUIRES EXTENSIVE FORMING AND CONSTRUCTION TIME.
2. NOT COST EFFECTIVE FOR HIGH WALLS.
3. CONCRETE THICKNESS, REINFORCING STEEL, AND TOE LENGTH MUST BE DESIGNED ON A CASE-BY-CASE BASIS.

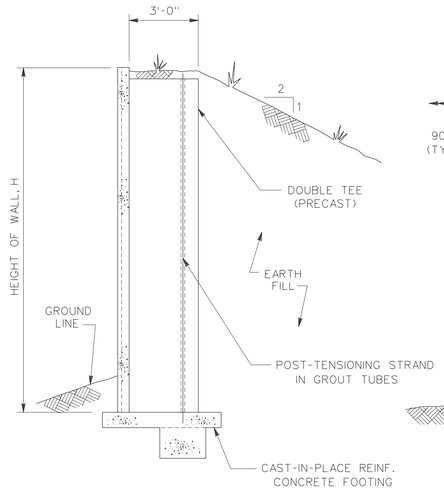

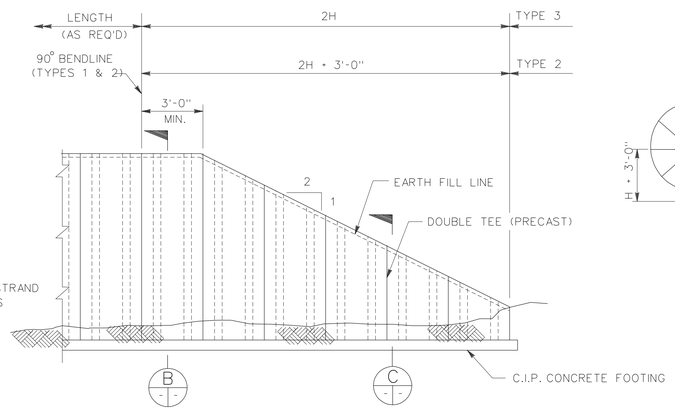

PARTIAL ELEVATION-TYPE 2 AND 3
N.T.S.

SECTION B
SECTION C SIM.
N.T.S.

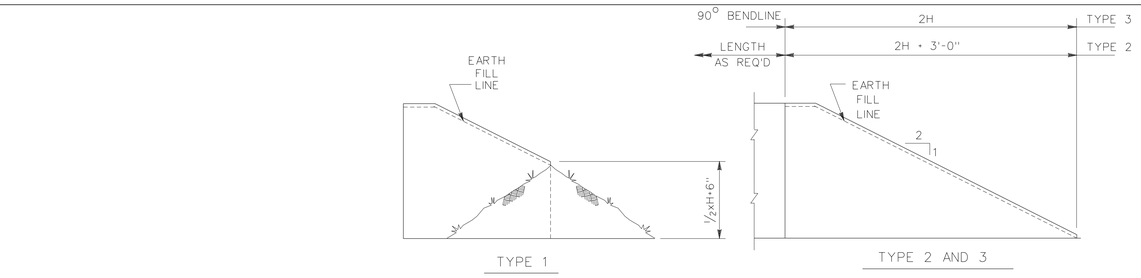

TYPE 1

TYPE 2 AND 3

END ELEVATION
N.T.S.

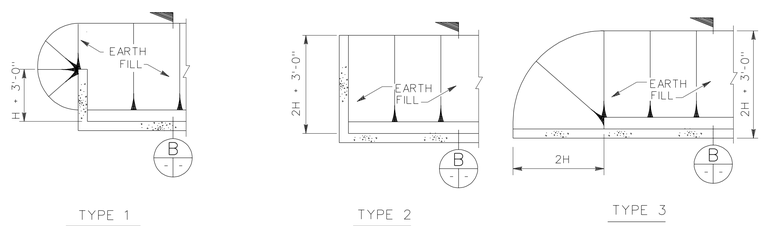

TYPE 1 | TYPE 2 | TYPE 3

END PLAN
N.T.S.

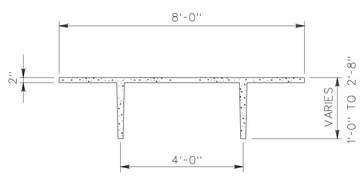

TYPICAL CROSS SECTION OF DOUBLE TEE

B14 - PRECAST DOUBLE TEES

ESTIMATED COST, $			
PER LIN. FT. OF CROSS SECTION 15 FT. HIGH	LUMP SUM END		
	TYPE 1	TYPE 2	TYPE 3
430	4,300	6,600	7,700

ESTIMATED ERECTION TIME MANHOURS			
100 LIN. FT. OF CROSS SECTION 15 FT. HIGH	END TYPE 1	END TYPE 2	END TYPE 3
940	90	90	140

REMARKS:

1. REQUIRES NO COSTLY FORMWORK.
2. VARIETY OF ARCHITECTURAL FINISHES POSSIBLE.
3. WITHOUT PRESTRESSING, THICK STEMS AND MORE THAN NORMAL REINFORCEMENTS REQUIRED.
4. CRANE EQUIPMENT REQUIRED FOR HANDLING AND ERECTION.
5. SHIMS FOR LEVELING AND NON-SHRINK, NON-METALLIC GROUT REQUIRED PRIOR TO POST-TENSIONING.
6. FOOTINGS REQUIRE ANCHORS FOR POST-TENSIONING.
7. AN INNOVATIVE RETAINING SYSTEM USED BY COLORADO DIVISION OF HIGHWAYS.

Symbol	Description	Date	Approved
1	SHEET TOTAL CHANGED	22NOV91	

Revisions

U.S. ARMY ENGINEER DIVISION, HUNTSVILLE
CORPS OF ENGINEERS
HUNTSVILLE, ALABAMA

Site adapt A/E :

US Army Corps of Engineers

Dwn. by : RDP | Ckd. by : AF

BARRICADES

Reviewed by :

Approved by :

Date : 2 DEC 88

Drawing code : DEF 149-30-01

Sheet reference number : 8

Design file no. : 51729

Rev.

Sheet 8 of 13

barr8.dgn