CORPS OF ENGINEERS | 4 | 3 | 2 | 1 | U. S. ARMY

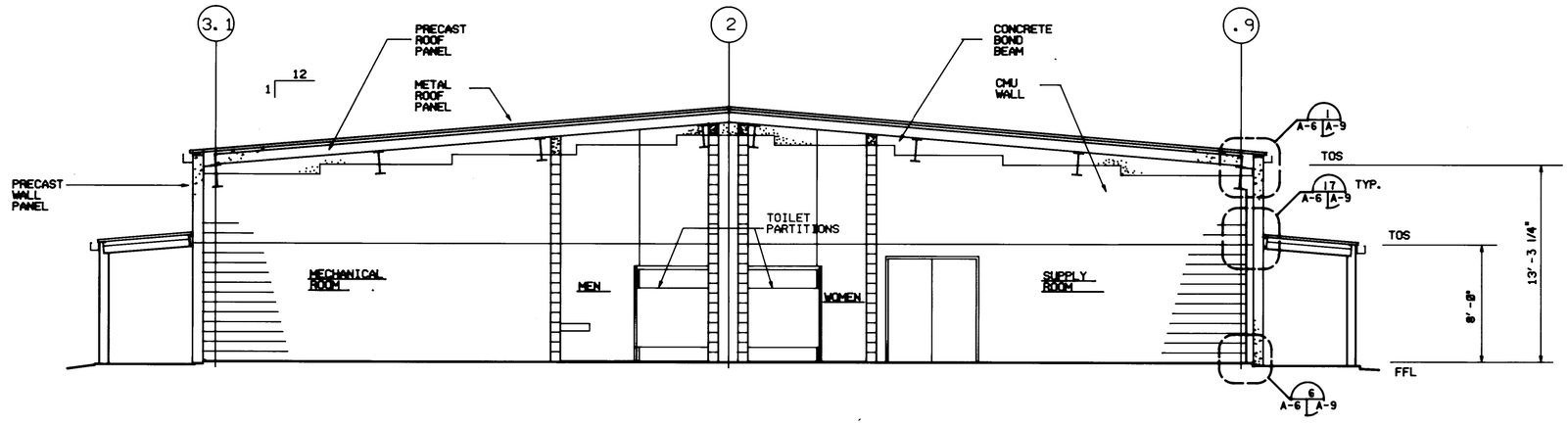

SECTION

SCALE: 1/4" = 1'-0"

A-2 A A-6

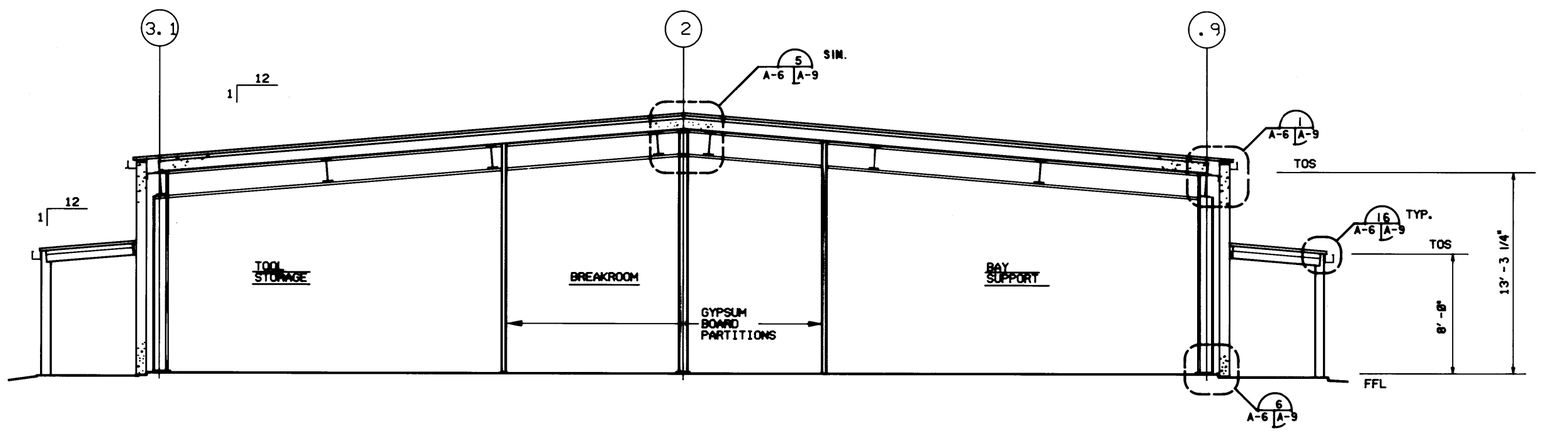

SECTION

SCALE: 1/4" = 1'-0"

A-2 B A-6

0 2' 4' 8' 12'

SCALE: 1/4" = 1'-0"

Symbol	Description	Date	Approved
	Revisions		

US ARMY ENGINEER DIVISION HUNTSVILLE
CORPS OF ENGINEERS
HUNTSVILLE, ALABAMA

Site adapt A/E :

US Army Corps of Engineers

STANDARD DESIGN
AMMUNITION SURVEILLANCE FACILITY
SECTIONS

Dwn. by : Ckd. by :

Reviewed by : JFS

Date :

Sheet reference number : A-6

Design file no. :

Rev.

Approved by :

Drawing code : STD 216-12-01

Sheet of

5 | 4 | 3 | 2 | 1