CORPS OF ENGINEERS | U. S. ARMY

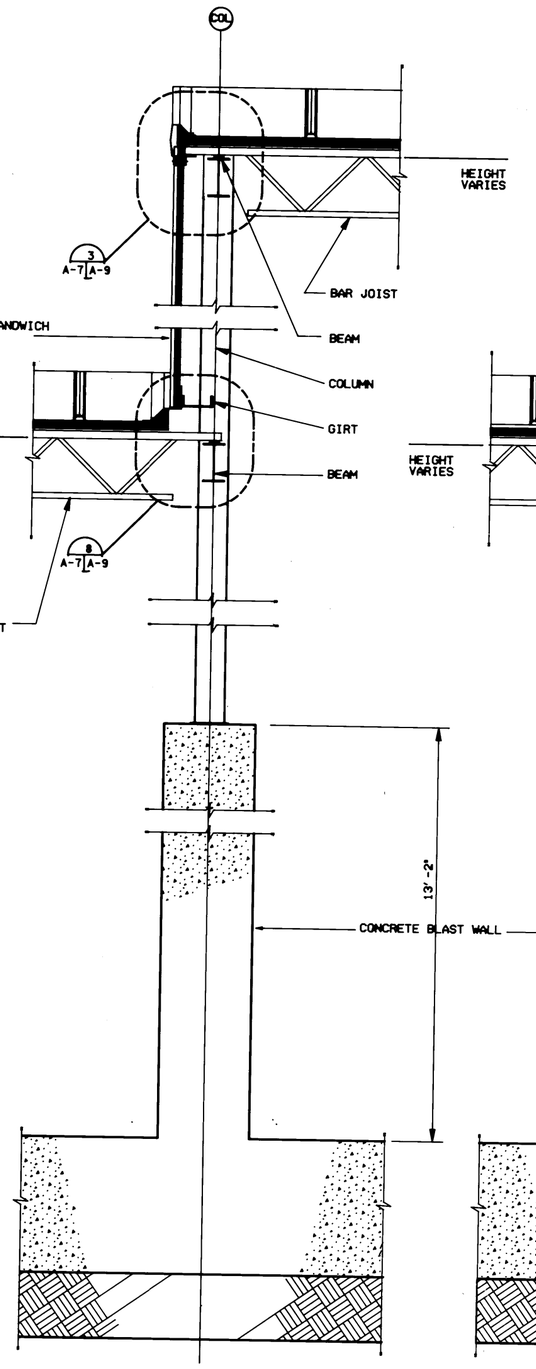

SECTION 1 A-3 A-7
SCALE 3/4" =1'-0"

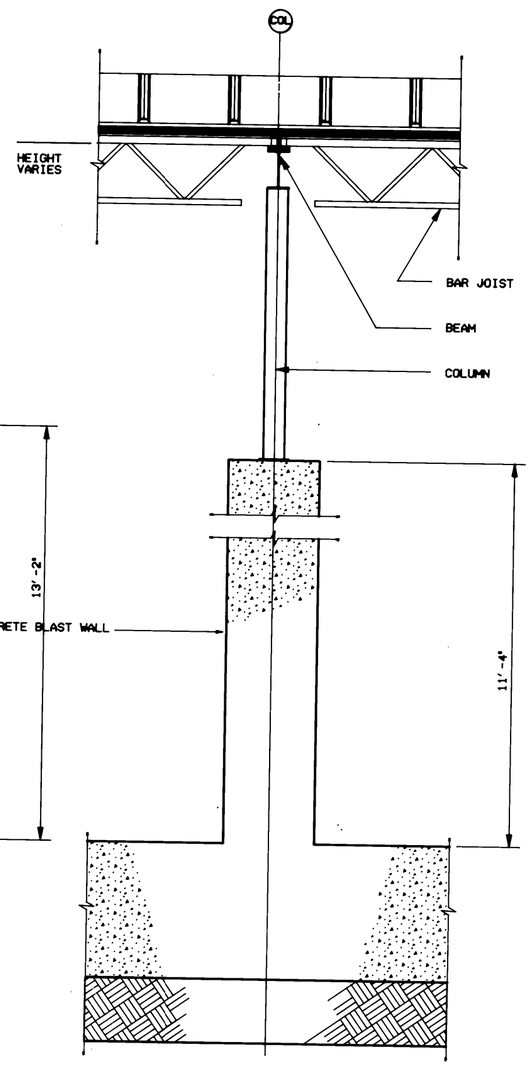

SECTION 2 A-1 A-7
SCALE 3/4" =1'-0"

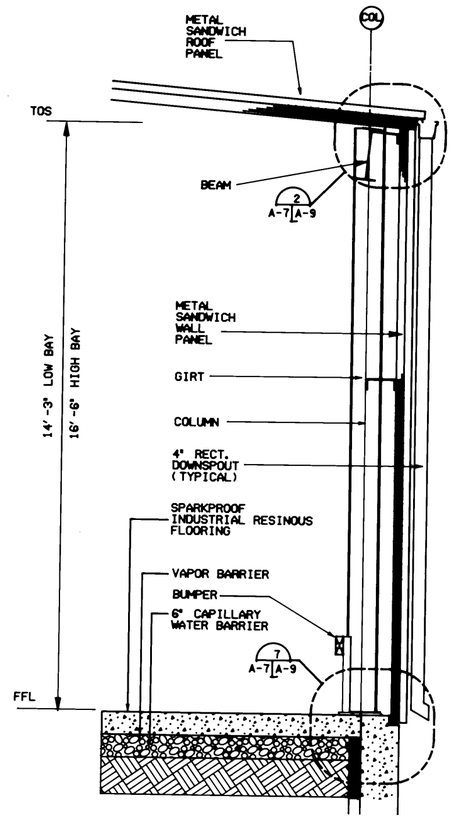

SECTION 3 A-1 A-7
SCALE 3/4" =1'-0"

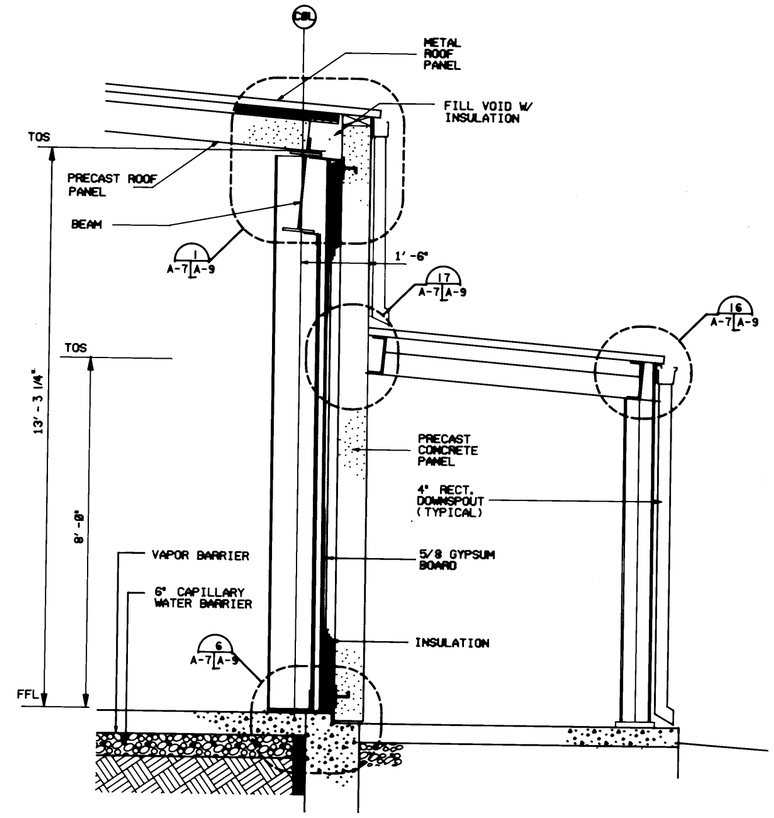

SECTION 4 A-2 A-7
SCALE 3/4" =1'-0"

0 6" 1' 2' 3' 4'
SCALE 3/4" =1'-0"

Symbol	Description	Date	Approved
	Revisions		

US ARMY ENGINEER DIVISION HUNTSVILLE
CORPS OF ENGINEERS
HUNTSVILLE, ALABAMA

Site adapt A/E :

US Army Corps of Engineers

Dwn. by : Ckd. by :

STANDARD DESIGN
AMMUNITION SURVEILLANCE FACILITY
WALL SECTIONS

Reviewed by : JFS
Date :
Sheet reference number : A-7
Design file no. :
Rev.
Approved by :
Drawing code : STD 216-12-01
Sheet of