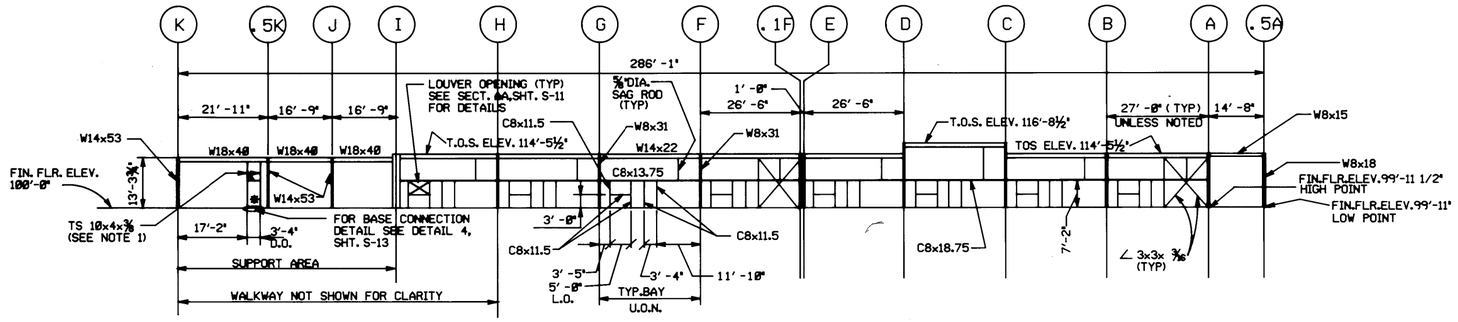

*SEE NOTE ELEVATION B.

ELEVATION A S-1 S-3

SCALE: 1/16"=1'-0"

NOTE:

1. FOR TUBE CONNECTION DETAILS SEE SHEET S-14.

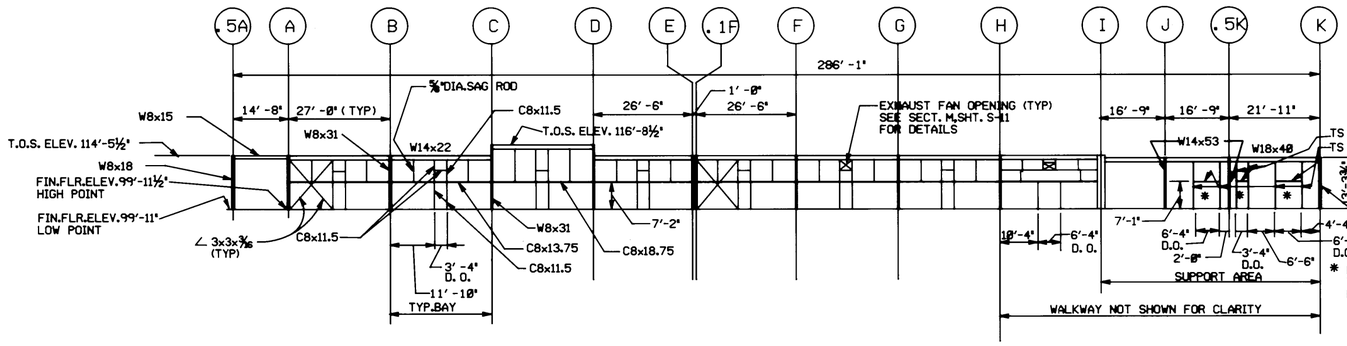

ELEVATION B S-1 S-3

SCALE: 1/16"=1'-0"

* DOOR OPENING WIDTH AND HEIGHT TO MATCH REQUIREMENTS OF BLAST DOOR MANUFACTURER.

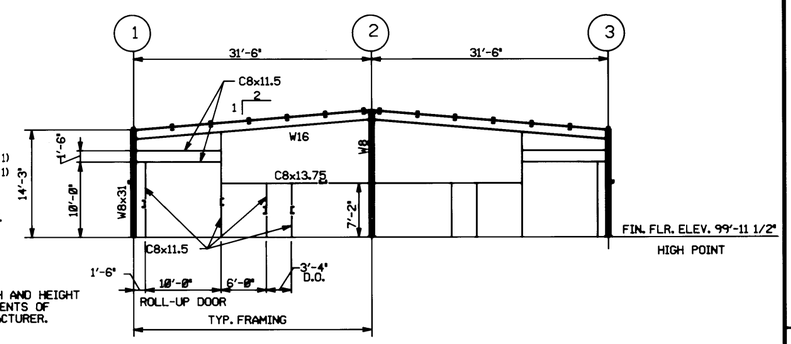

SECTION E S-2 S-3

SCALE: 1/16"=1'-0"

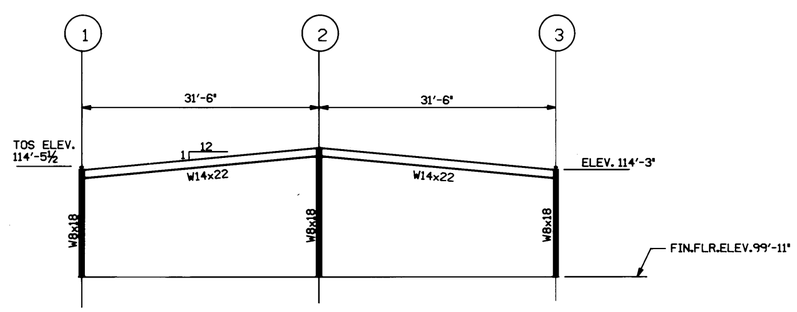

ELEVATION C S-1 S-3

SCALE: 1/16"=1'-0"

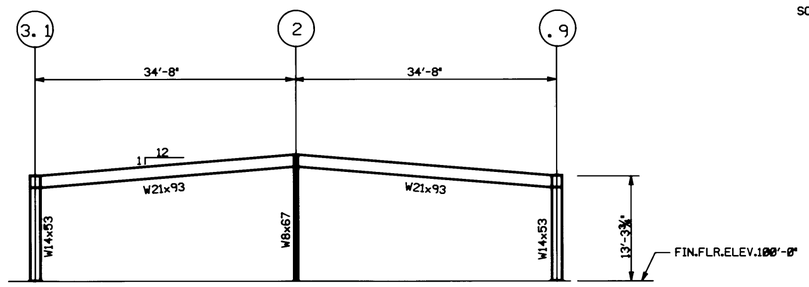

ELEVATION D S-1 S-3

SCALE: 1/16"=1'-0"

KEY PLAN

Symbol	Description	Date	Approved
	Revisions		

US ARMY ENGINEER DIVISION HUNTSVILLE
CORPS OF ENGINEERS
HUNTSVILLE, ALABAMA

Site adapt A/E :

US Army Corps of Engineers

STANDARD DESIGN
AMMUNITION SURVEILLANCE FACILITY
ELEVATIONS

Dwn. by : RDP
Ckd. by :
Reviewed by :
Date :
Approved by :
Drawing code : STD 216-12-01
Sheet reference number : S-3
Design file no. :
Rev.
Sheet of