CORPS OF ENGINEERS | U. S. ARMY

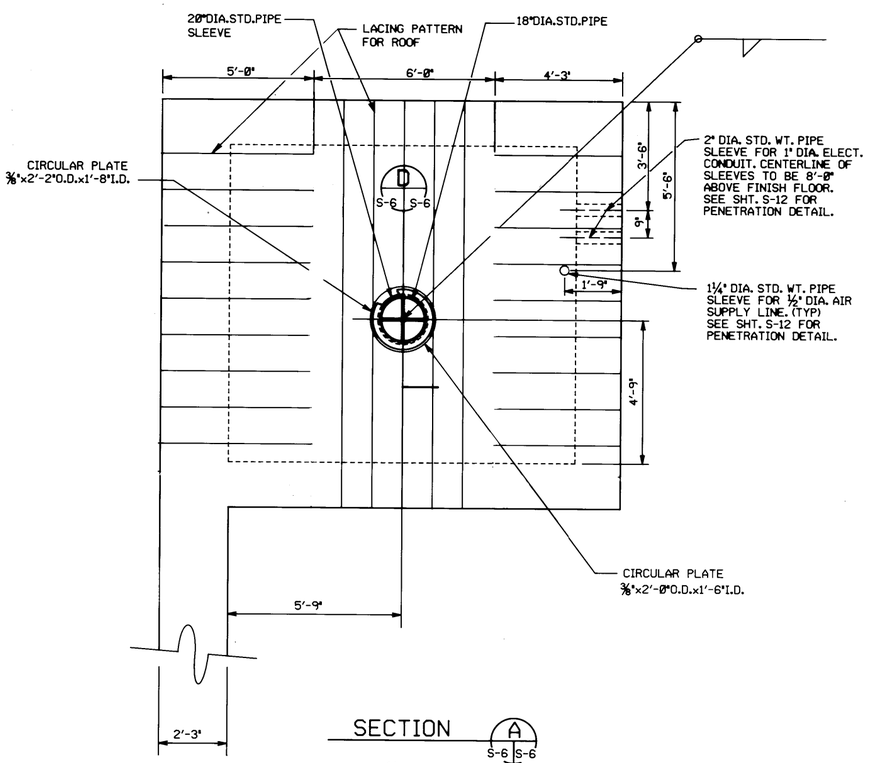

SECTION A S-6 S-6

SCALE: ½"=1'-0"

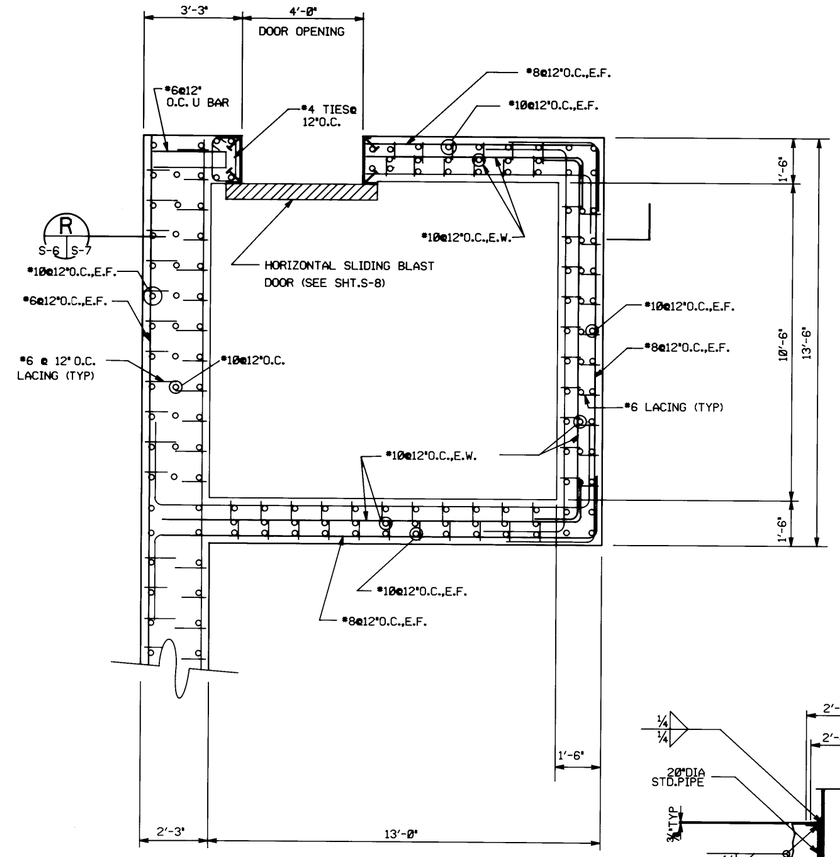

SECTION B S-6 S-6

SCALE: ½"=1'-0"

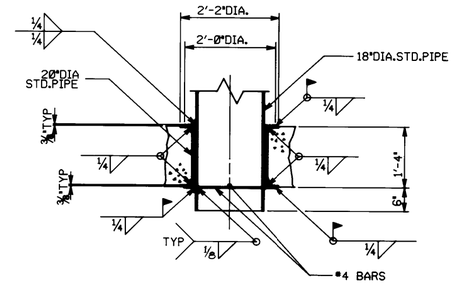

SECTION D S-6 S-6

SCALE: ¾"=1'-0"

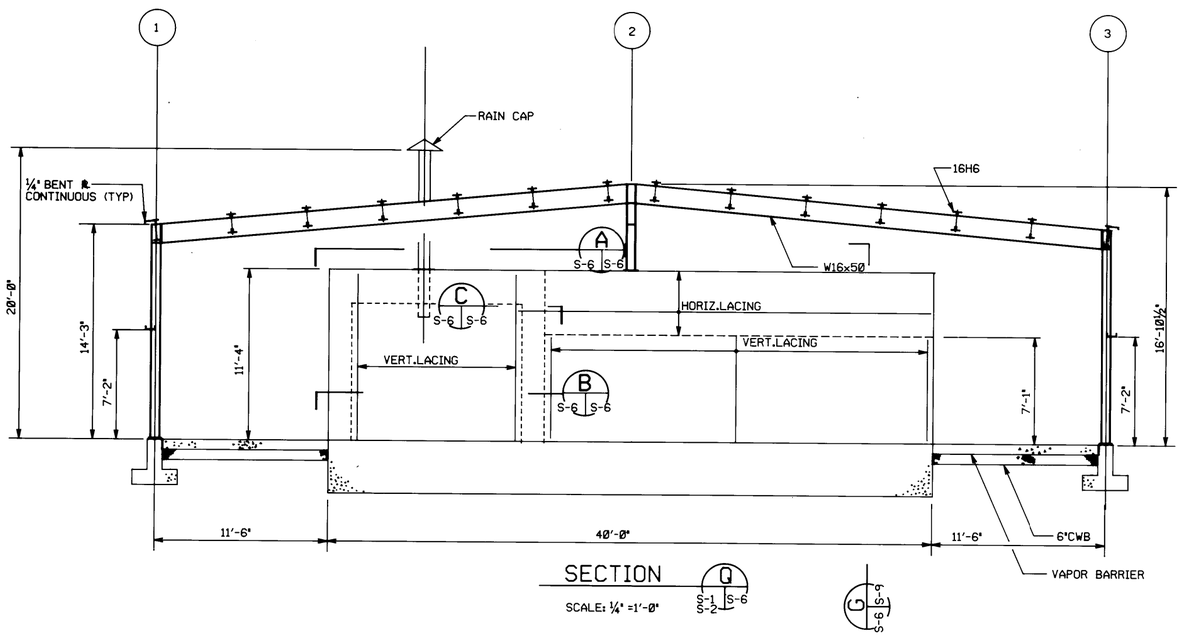

SECTION Q S-1 S-2 S-6

SCALE: ¼" =1'-0"

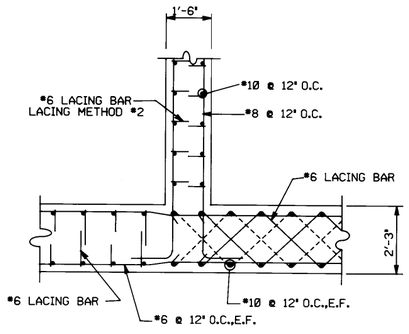

SECTION C S-6 S-6

SCALE: ½"=1'-0"

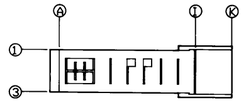

KEY PLAN

Symbol	Description	Date	Approved
	Revisions		

US ARMY ENGINEER DIVISION HUNTSVILLE
CORPS OF ENGINEERS
HUNTSVILLE, ALABAMA

Site adapt A/E :

US Army Corps of Engineers

STANDARD DESIGN
AMMUNITION SURVEILLANCE FACILITY
TEST CUBICLE

Dwn. by : RDP | Ckd. by : (DAW)

Reviewed by : | Date :

Approved by :

Drawing code : STD 216 - 12 - 01

Sheet reference number : S-6

Design file no. : | Rev.

Sheet of