CORPS OF ENGINEERS | 4 | 3 | 2 | 1 | U.S. ARMY

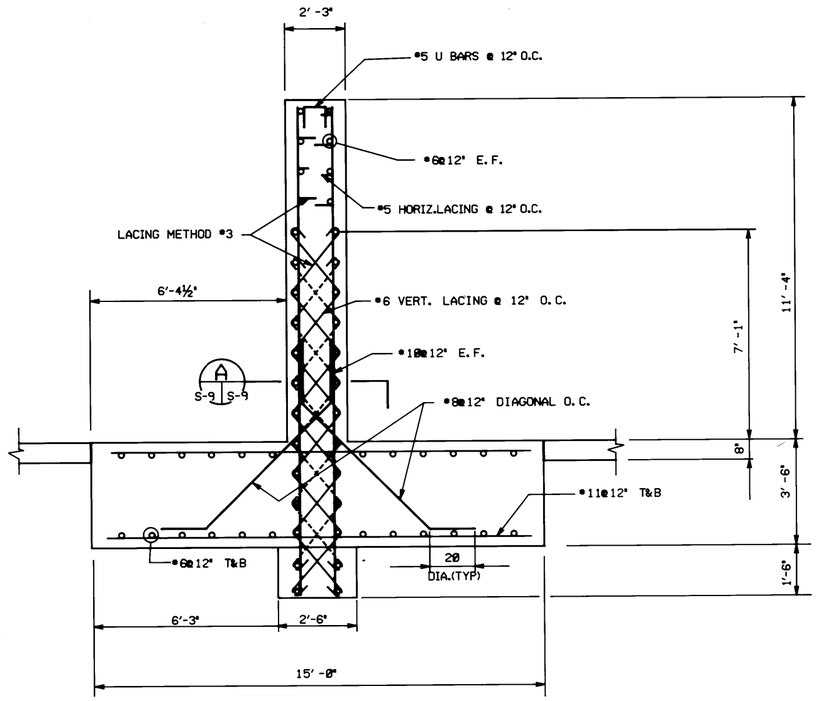

SECTION G
SCALE:½"=1'-0" S-1 S-6 S-9

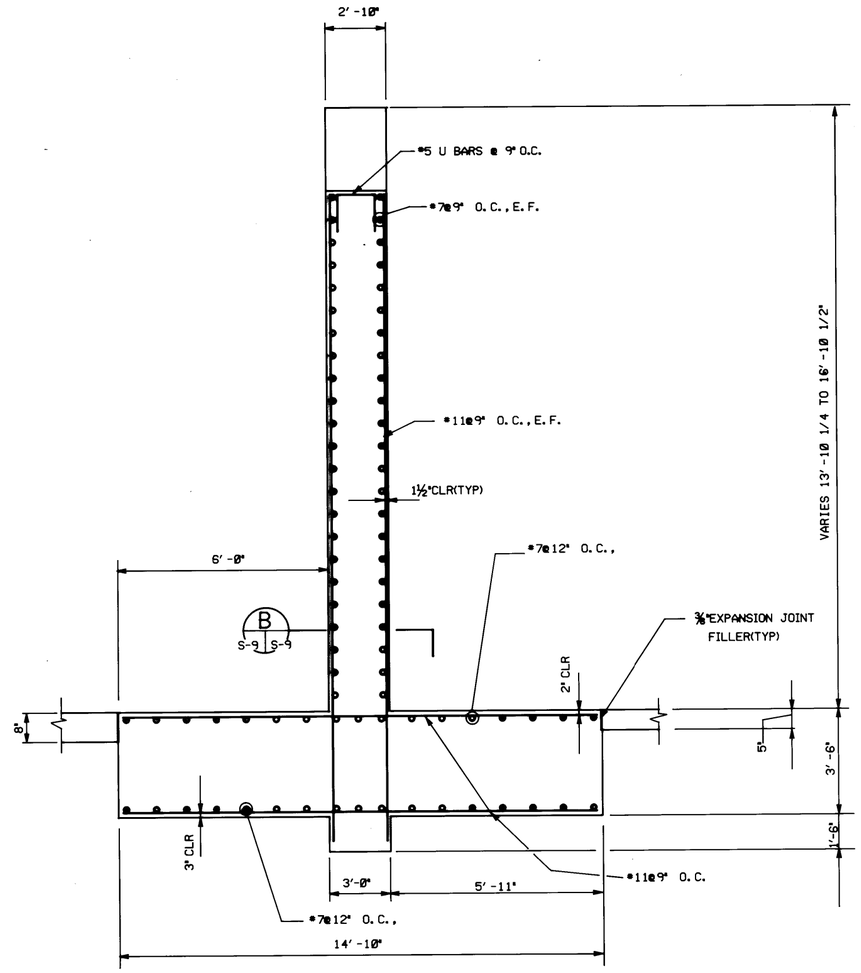

SECTION H
SCALE: NONE S-1 S-9

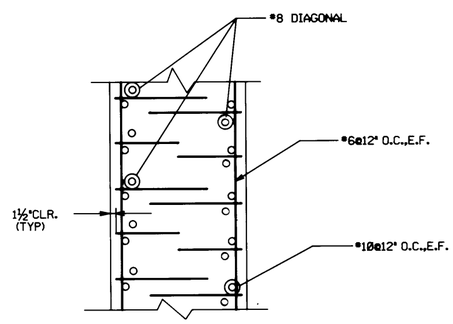

SECTION A
SCALE:1"=1'-0" S-9 S-9

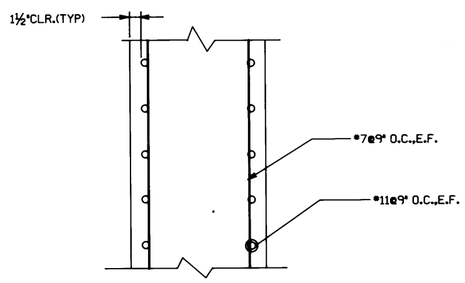

SECTION B
SCALE:1"=1'-0" S-9 S-9

KEY PLAN

Symbol	Description	Date	Approved
	Revisions		

US ARMY ENGINEER DIVISION HUNTSVILLE
CORPS OF ENGINEERS
HUNTSVILLE, ALABAMA

Site adapt A/E :

US Army Corps of Engineers

STANDARD DESIGN
AMMUNITION SURVEILLANCE FACILITY
BLAST WALL SECTIONS & DETAILS

Dwn. by : RDP
Ckd. by :
Reviewed by :
Date :
Approved by :
Drawing code : STD 216 - 12 - 01
Sheet reference number : S-9
Design file no. :
Rev.
Sheet of

5 | 4 | 3 | 2 | 1