CORPS OF ENGINEERS | 4 | 3 | 2 | 1 | U. S. ARMY

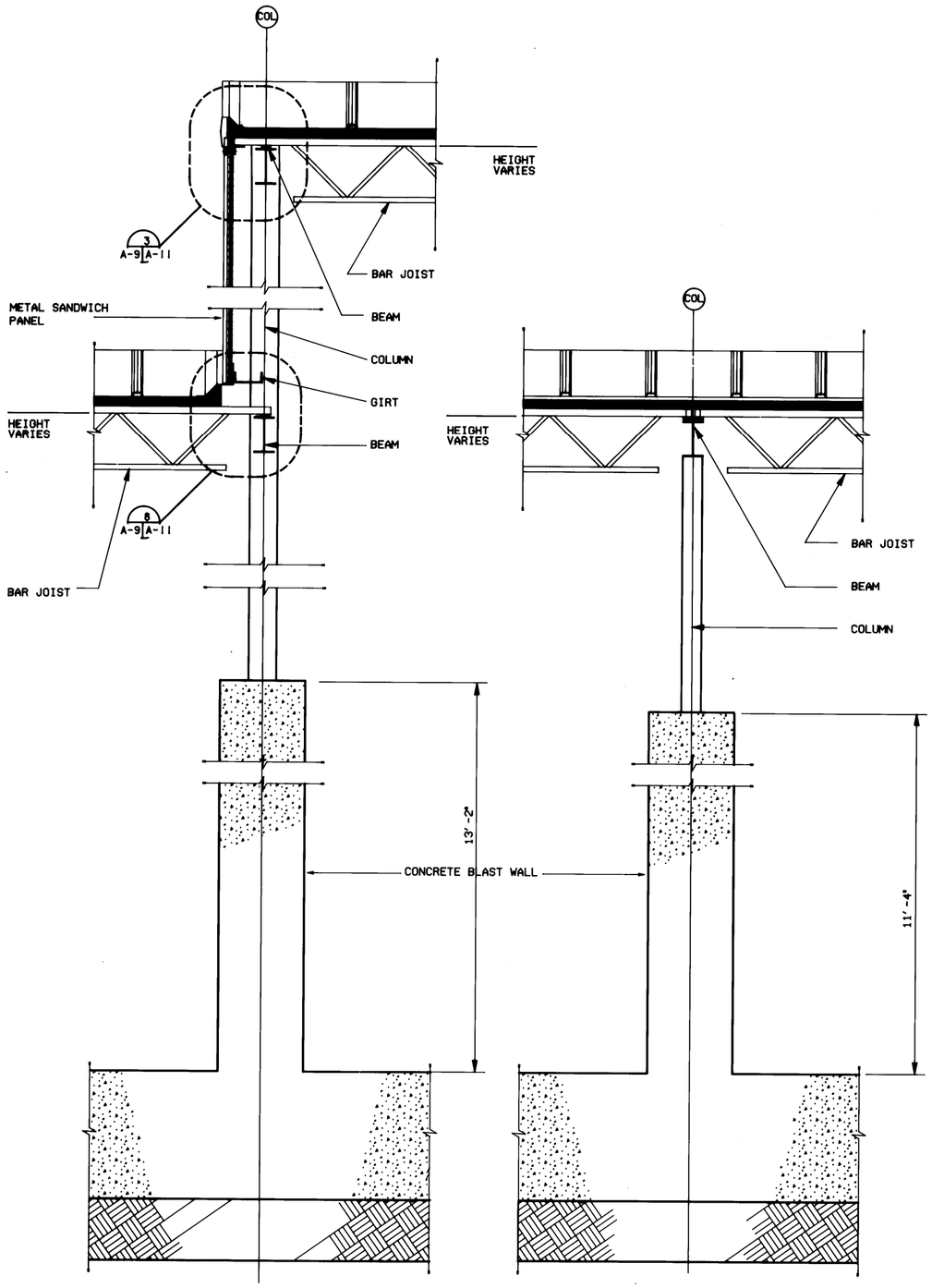

SECTION 1 A-4 A-9
SCALE 3/4" =1'-0"

SECTION 2 A-1 A-3 A-9
SCALE 3/4" =1'-0"

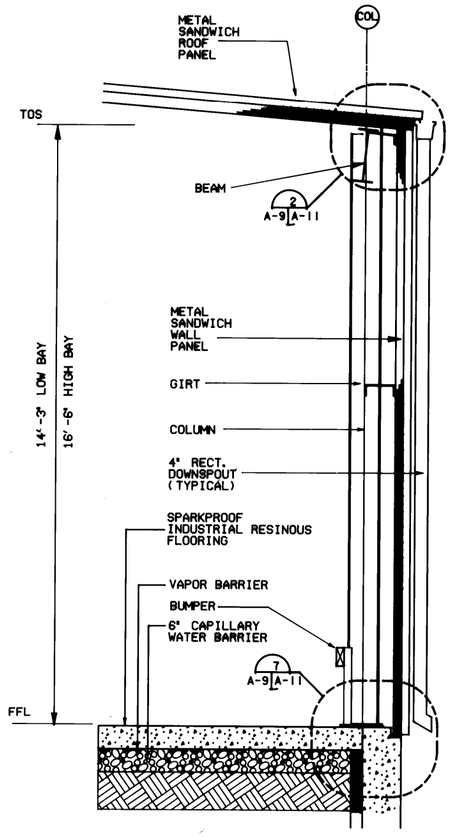

SECTION 3 A-1 A-3 A-9
SCALE 3/4" =1'-0"

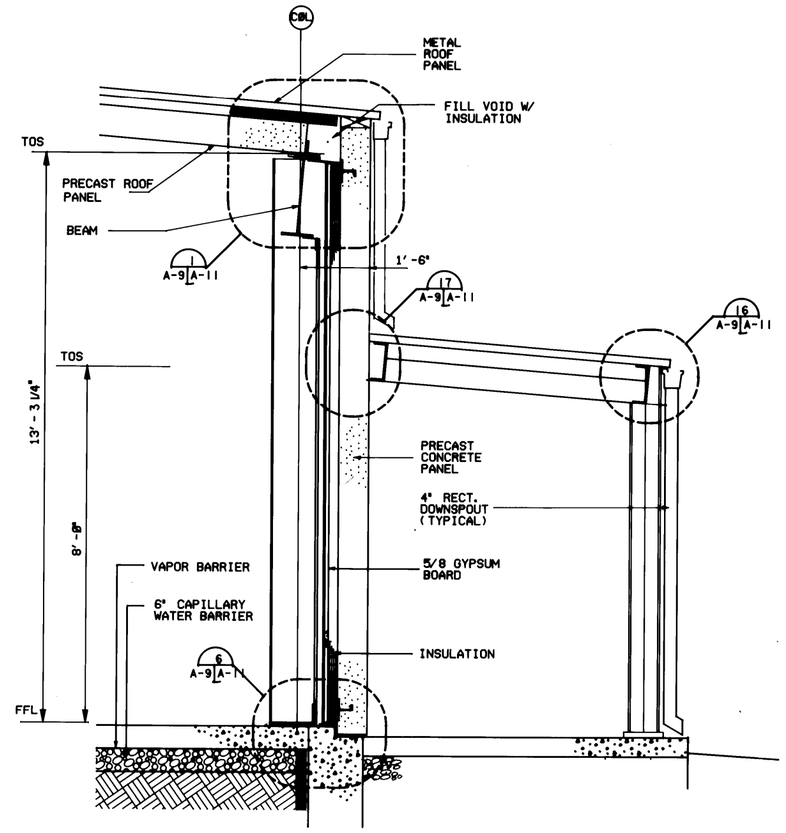

SECTION 4 A-2 A-9
SCALE 3/4" =1'-0"

0 6" 1' 2' 3' 4'
SCALE 3/4" =1'-0"

Symbol	Description	Date	Approved
	Revisions		

US ARMY ENGINEER DIVISION HUNTSVILLE
CORPS OF ENGINEERS
HUNTSVILLE, ALABAMA

Site adapt A/E :

US Army Corps of Engineers

STANDARD DESIGN
AMMUNITION SURVEILLANCE FACILITY
WALL SECTIONS

Dwn. by : | Ckd. by :
Reviewed by : JFS | Date : | Sheet reference number : A-9 | Design file no. : | Rev.
Approved by : | Drawing code : STD 216-12-02 | Sheet of

5 | 4 | 3 | 2 | 1