CORPS OF ENGINEERS | U. S. ARMY

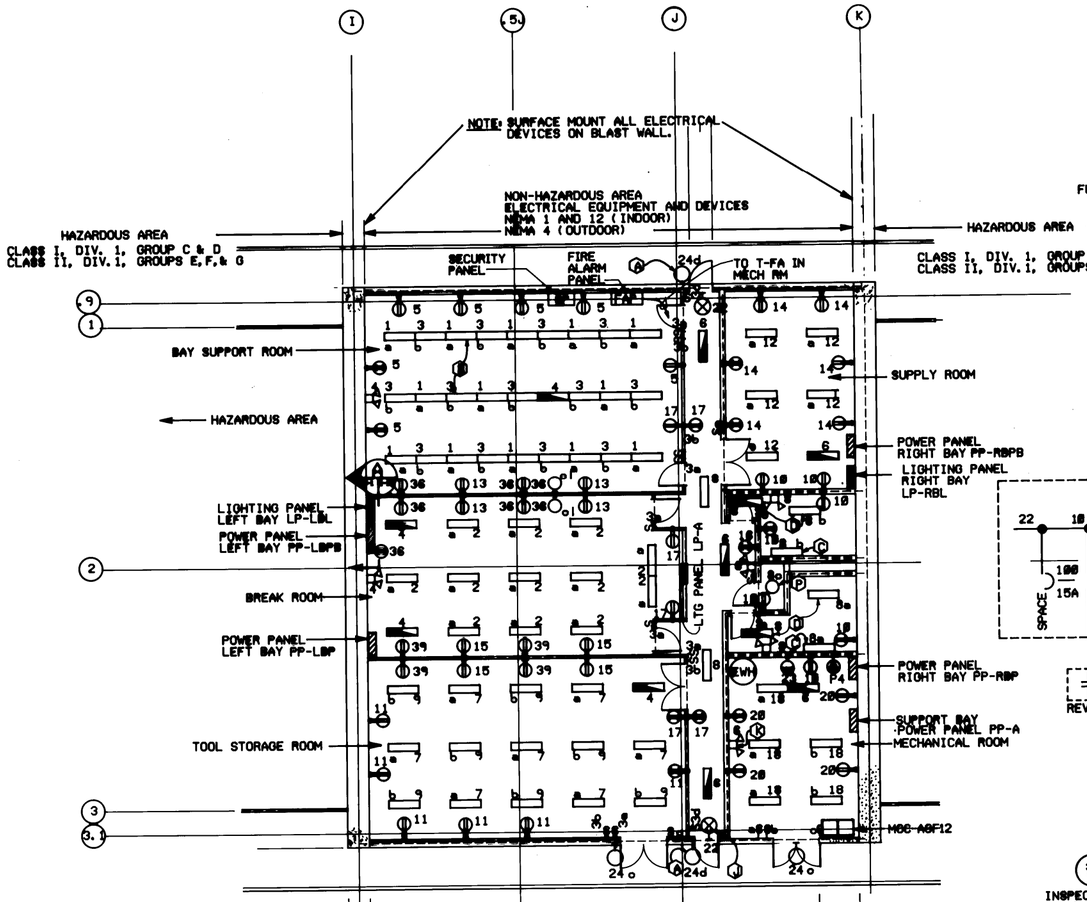

ELECTRICAL-LIGHTING PLAN

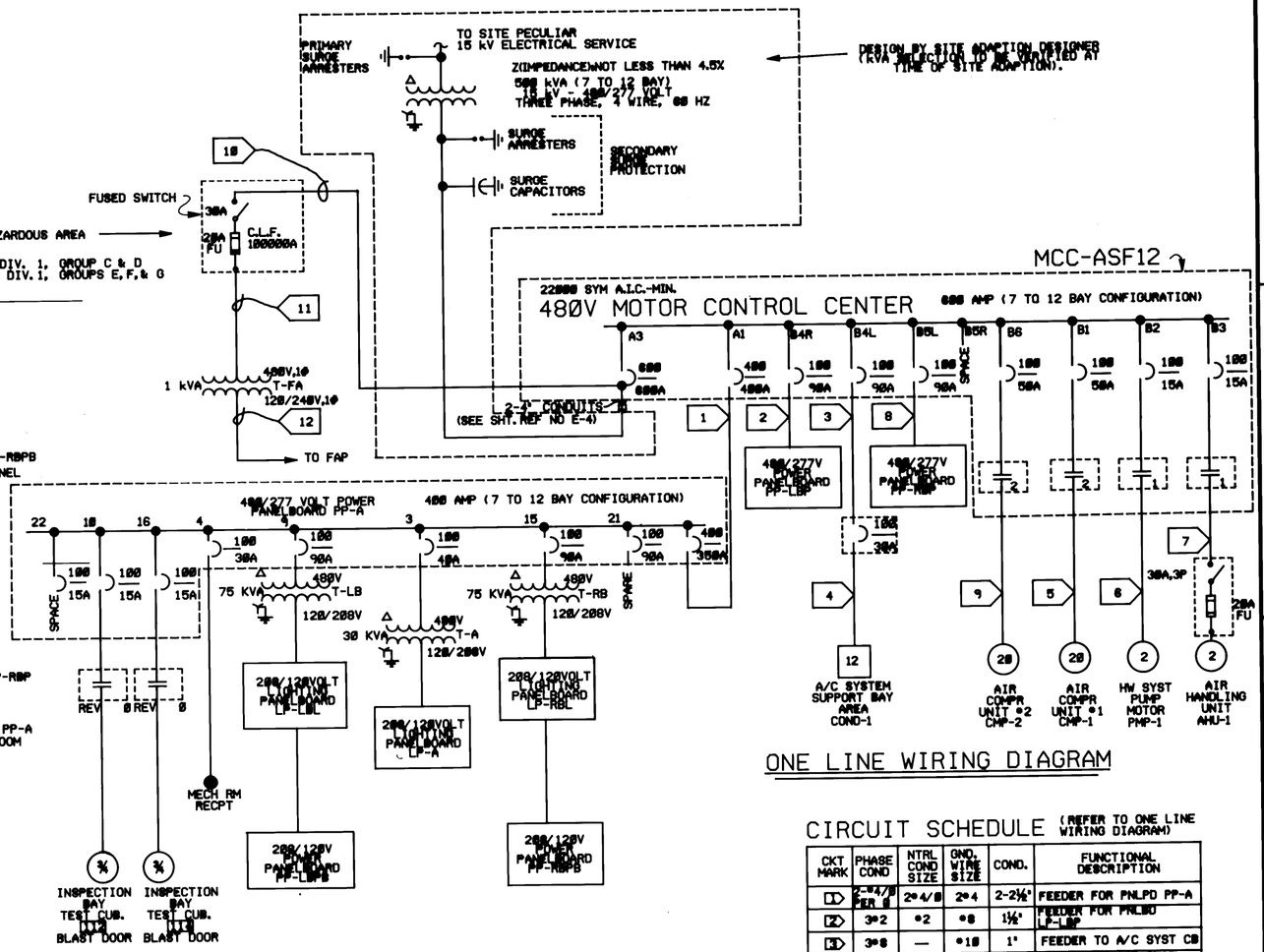

ONE LINE WIRING DIAGRAM

LTG. PANELBOARD LP-A LOCATION: CORRIDOR SURFACE MOUNTED FLUSH BOTTOM FEED
100 AMP MAIN BREAKER W/ 90 AMP TRIP 10,000 SYM A.I.C. MIN.
CIRCUIT BREAKER TYPE 208/120 VOLTS 3 PHASE 4 WIRE 225 AMP MAINS

CKT. NO.	TRIP AMPS	NO. POLES	WIRE SIZE	LOAD SERVED	LOAD V-A	PHASE LOAD, V-A Ø A	Ø B	Ø C	LOAD V-A	LOAD SERVED	WIRE SIZE	NO. POLES	TRIP AMPS	CKT. NO.
1	20	1	*12	BAY SUPPORT ROOM LIGHTING (53x)	1625	3125	-	-	1500	BREAK ROOM LIGHTING (50x)	*12	1	20	2
3	20	1	*12	BAY SUPPORT ROOM LIGHTING (25x)	1625	-	2250	-	625	BAY SUPPORT ROOM LIGHT & SWITCH LTG	*12	*1	20	4
5	20	1	*12	BAY SUPPORT ROOM RECEPTACLES (7x)	1575	-	-	2325	750	TOOL STORAGE ROOM LIGHTING	*12	*1	20	6
7	20	1	*12	TOOL STORAGE ROOM LIGHTING (9x)	950	1975	-	-	1125	CORRIDOR & REST ROOM LIGHT CIRCUIT	*12	*1	20	8
9	20	1	*12	TOOL STORAGE ROOM LIGHTING (26x)	950	-	2250	-	1300	BAY SUPPORT ROOM MISC. APPL RECPTS	*12	10P	20	10
11	20	1	*12	TOOL STORAGE ROOM RECEPTACLES (4x)	1350	-	-	1975	625	SUPPLY ROOM LIGHTING	*12	1	20	12
13	20	1	*12	BAY SUPPORT RM & BRK RM RECPTS (4x)	900	2250	-	-	1350	SUPPLY ROOM RECPTS. (4x)	*12	1	20	14
15	20	1	*12	TOOL STORAGE AND BREAK RM RECPTS	1125	-	1625	-	500	WATER COOLER RECEPTACLE	*12	1	20	16
17	20	1	*12	CORRIDOR ADJACENT OFFICE RECPTS (6x)	1350	-	-	2100	750	MECHANICAL ROOM RECEPTACLE	*12	1	20	18
19	30	2	*10	WATER HEATER 208V, SINGLE PHASE 30A CIRCUIT	2200	3100	-	-	900	MECH. ROOM RECPTS. (4x)	*12	1	20	20
					2200	-	2400	-	200	EXIT LIGHTS	*12	*1	20	22
23	30	2	*10	MECHANICAL ROOM 208V, SINGLE PHASE 30A CIRCUIT	2200	-	-	2700	500	EXT. LIGHTING	*12	*1	20	24
					2200	2700	-	-	500	UH-1A	*12	1	20	26
27	20	1	*12	EXHAUST FAN EF-1	500	-	1000	-	500	UH-2A	*12	1	20	28
29	20	1	*12	EXHAUST FAN EF-2	500	-	-	1000	500	UH-3A	*12	1	20	30
31	20	1	*12	EXHAUST FAN EF-3	500	1000	-	-	500	UH-4A	*12	1	20	32
33	20	1	*12	EXHAUST FAN EF-4	500	-	1000	-	500	UH-5A	*12	1	20	34
35	20	*1	*12	SECURITY PANEL	500	-	-	1400	900	BAY SUPPORT RM & BREAK RM REC. (6x)	*12	1	20	36
37	20	1		SPARE	1000	2000	-	-	1000	SPARES		1	20	38
39	20	1	*12	BREAK RM & TOOL STORAGE RECEPTS.	900	-	1900	-	1000			1	20	40
41	20	1		SPARE	1000	-	-	2000	1000			1	20	42

SUPPLIED FROM PP-A AND TRANSFORMER T-A — TOTAL 16100 12375 13500 — TOTAL CONNECTED LOAD 41.975 kVA
50% DEMAND EST., DEMAND LOAD 21.0 kVA

* BREAKER EQUIPPED WITH LOCKING DEVICE

OF - BREAKER SHALL BE GROUND FAULT CIRCUIT INTERRUPTER TYPE

PANELBOARD PP-A POWER LOCATION MECH EQUIPMENT ROOM SURFACE MOUNTED TOP FEED
400 AMP MAIN BREAKER W/350 AMP TRIP 14,000 SYM A.I.C. MIN.
CIRCUIT BREAKER TYPE 277/480 VOLTS 3 PHASE 4 WIRE 400 AMP MAINS

CKT. NO.	TRIP AMPS	NO. POLES	WIRE SIZE	LOAD SERVED	LOAD V-A	PHASE LOAD, V-A Ø A	Ø B	Ø C	LOAD V-A	LOAD SERVED	WIRE SIZE	NO. POLES	TRIP AMPS	CKT. NO.
3	40	3	*8	TRANSFORMER T-A & PANELBOARD LP-A	30000				11,000	MECHANICAL ROOM 480V RECEPTACLE	*8	3	30	4
9	90	3	*2	TRANSFORMER T-LB & PNLBD. LP-LBL	75000				1000	INSPECTION BAY TEST CUBICLE 112 M/O BLAST DOOR	*12	3	15	10
15	90	3	*2	TRANSFORMER T-RB & PNLBD. LP-RBL	75000				1000	INSPECTION BAY TEST CUBICLE 114 M/O BLAST DOOR	*12	3	15	16
21	90	3		SPARE	75000				20000	EQUIPPED SPACE		3		22

SUPPLIED FROM 480V MCC-ASF12-A1 — TOTAL — TOTAL CONNECTED LOAD 200kVA
DEMAND EST. DEMAND LOAD 200kVA

NOTES:

1. ALL ELECTRICAL DEVICES, LUMINAIRES AND WIRING WITHIN INSPECTION BAYS SHALL BE RATED FOR THE NATIONAL ELECTRICAL CODE HAZARD CLASSIFICATION: CLASS I, DIVISION 1, GROUPS C&D CLASS II, DIVISION 1, GROUPS E, F, & G
2. CIRCUIT NUMBERS WITHOUT A PREFIX ARE FOR PANEL LP-A. CIRCUIT NUMBERS WITH A PREFIX "P" ARE FOR PANEL PP-A.

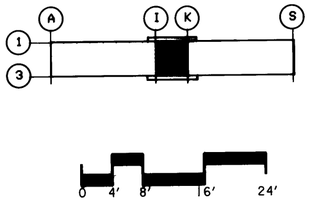

CIRCUIT SCHEDULE (REFER TO ONE LINE WIRING DIAGRAM)

CKT MARK	PHASE COND	NTRL COND SIZE	GND. WIRE SIZE	COND.	FUNCTIONAL DESCRIPTION
1	2-#4/0 PER Ø	2#4/0	2#4	2-2½"	FEEDER FOR PNLPD PP-A
2	3#2	#2	#8	1½"	FEEDER FOR PNLBD LP-LBP
3	3#8	—	#10	1"	FEEDER TO A/C SYST CB
4	3#10	—	#10	1"	FEEDER TO A/C SYST (12 HP TOTAL) COND-1
5	3#8	—	#10	1"	FEEDER TO AIR COMP #1
6	3#12	—	#12	¾"	FEEDER TO HW SYST PUMP MTR FUSED SWITCH
7	3#12	—	#12	¾"	FEEDER TO AHU (BAY SUPPORT AREA)
8	3#2	#2	#8	1½"	FEEDER FOR PNLBD PP-RBP
9	3#8	—	#10	1"	FEEDER TO AIR COMP #2
10	2#10	—	#10	1"	FEEDER TO F.A. SYS SW
11	2#12	—	#12	¾"	FEEDER TO F.A. TRANSF
12	2#12	1#12	#12	¾"	FEEDER TO F.A. CONTROL PANEL

Symbol	Description	Date	Approved
	Revisions		

US ARMY ENGINEER DIVISION HUNTSVILLE
CORPS OF ENGINEERS
HUNTSVILLE, ALABAMA

Site adapt A/E :

US Army Corps of Engineers

STANDARD DESIGN
AMMUNITION SURVEILLANCE FACILITY
ONE LINE WIRING DIAG, SCHEDULES & SUPPORT BAY LTG PLAN

Dwn. by : CG/TT | Ckd. by : | Reviewed by : | Date : | Approved by :

Sheet reference number : E - 1

Drawing code : STD 216-12-02

Design file no. : | Rev. | Sheet of