CORPS OF ENGINEERS | 4 | 3 | 2 | 1 | U. S. ARMY

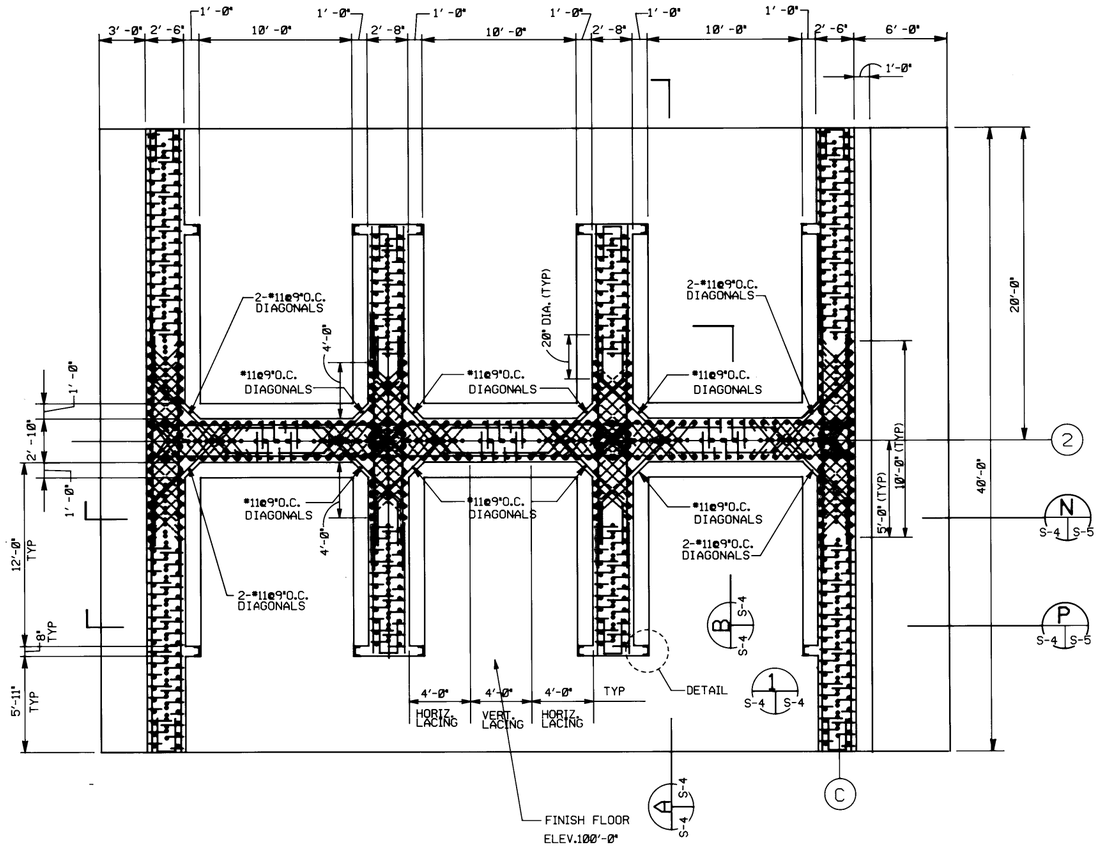

PARTIAL FLOOR PLAN (STORAGE CUBICLES)

SCALE:1/4"=1'-0"

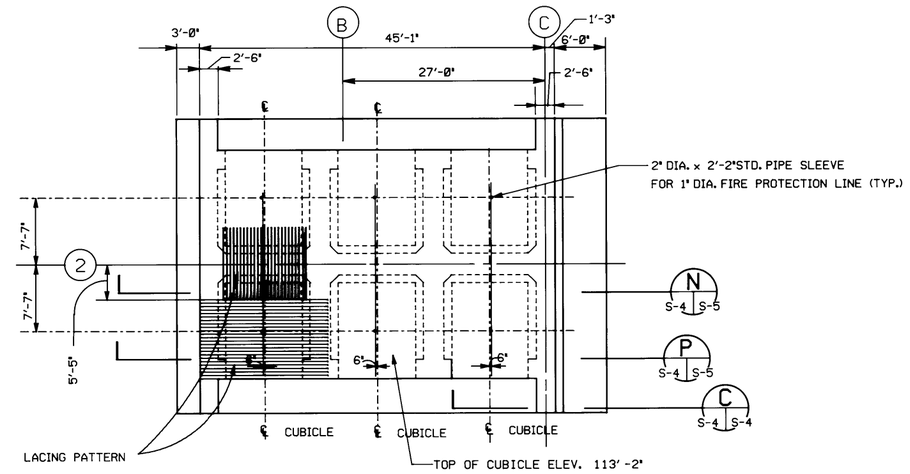

PARTIAL ROOF PLAN (STORAGE CUBICLES)

SCALE:1/8"=1'-0"

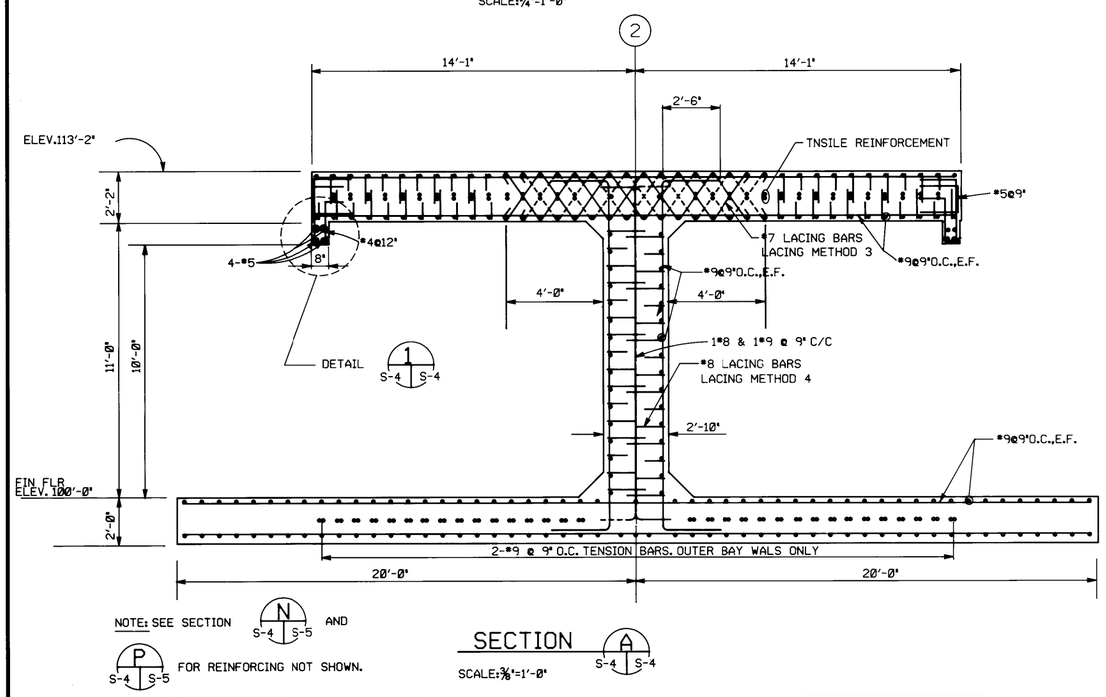

NOTE: SEE SECTION N S-4 S-5 AND P S-4 S-5 FOR REINFORCING NOT SHOWN.

SECTION A S-4 S-4

SCALE:3/8"=1'-0"

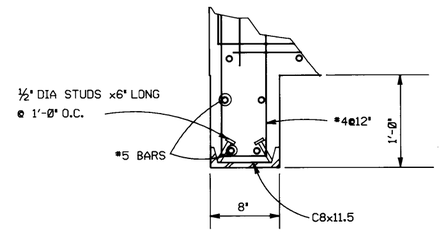

DETAIL 1 S-4 S-4

SCALE:1 1/2"=1'-0"

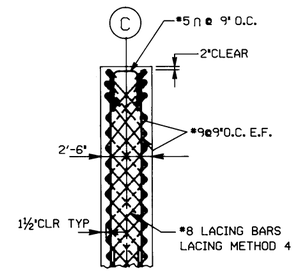

SECTION C S-4 S-4

SCALE:3/8"=1'-0"

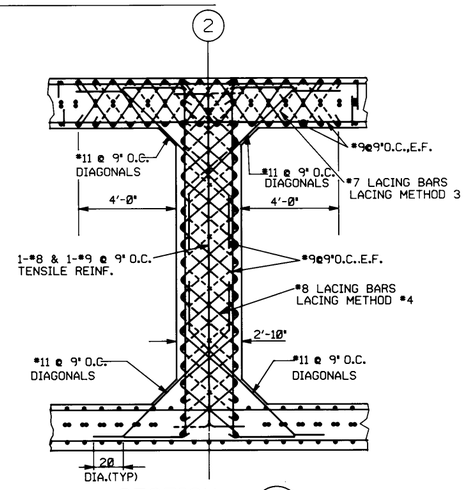

SECTION B S-4 S-4

SCALE:3/8"=1'-0"

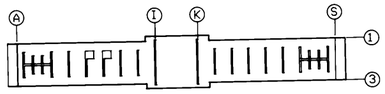

KEY PLAN

Symbol	Description	Date	Approved
	Revisions		

US ARMY ENGINEER DIVISION HUNTSVILLE
CORPS OF ENGINEERS
HUNTSVILLE, ALABAMA

Site adapt A/E :

US Army Corps of Engineers

STANDARD DESIGN
AMMUNITION SURVEILLANCE FACILITY
STORAGE CUBICLE

Dwn. by : RDP | Ckd. by : WAU

Reviewed by : RR | Date : | Sheet reference number : S-4 | Design file no. : | Rev.

Approved by : | Drawing code : STD 216 - 12 - 02 | Sheet of

5 | 4 | 3 | 2 | 1