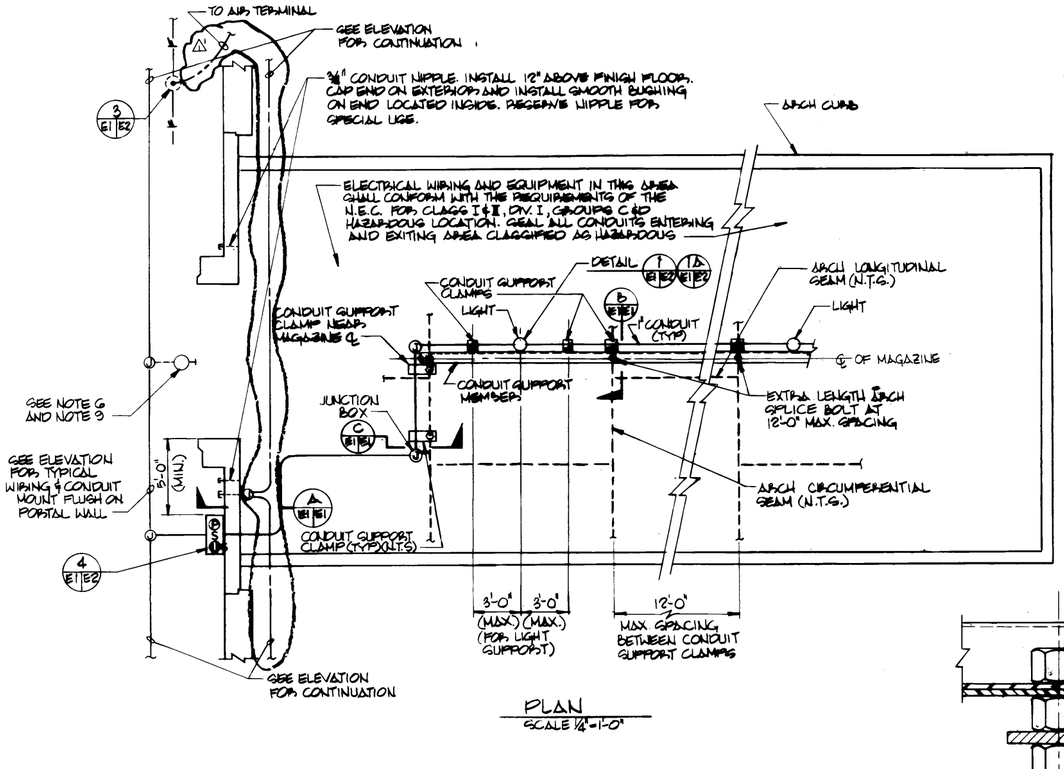

PLAN
SCALE 1/4"=1'-0"

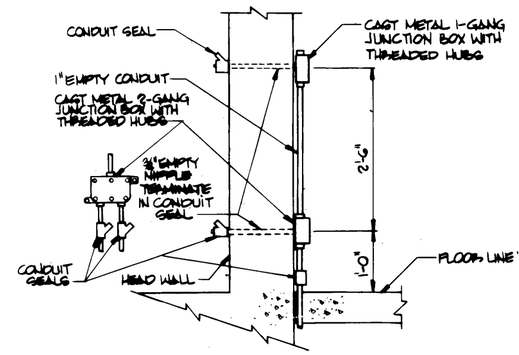

SECTION A
SCALE 1"=1'-0"

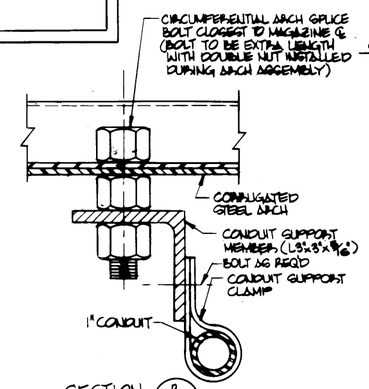

SECTION B
NOT TO SCALE

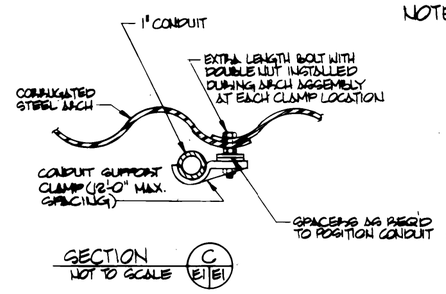

SECTION C
NOT TO SCALE

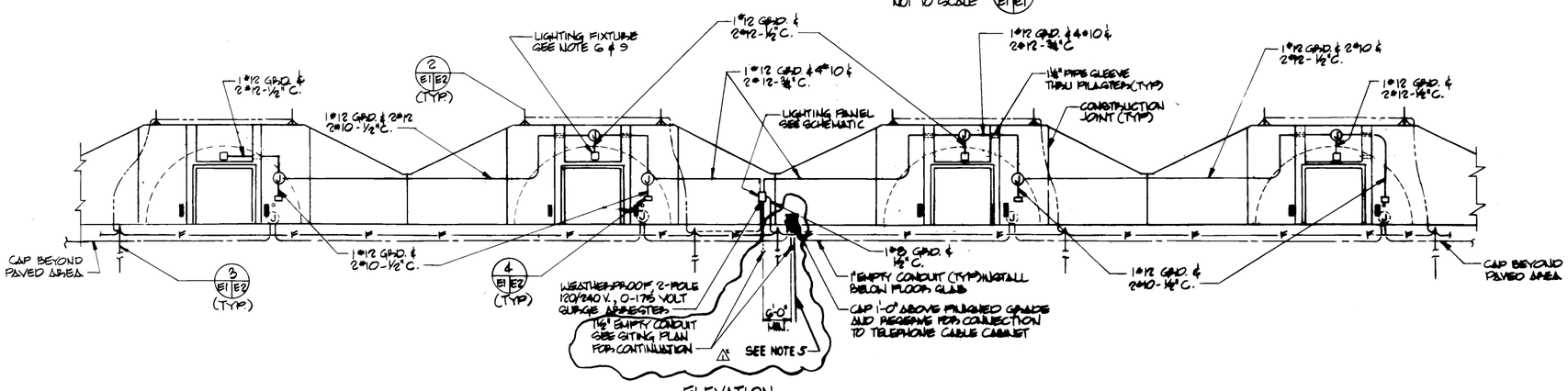

ELEVATION
NOT TO SCALE

GRAPHIC SCALES:

1"=1'-0" 12" 9" 6" 3" 0 1' 2'

1/4"=1'-0" 4' 2' 0 4' 8'

LEGEND

- WALL MOUNTED EXTERIOR LIGHTING FIXTURE.
- CEILING MOUNTED LIGHTING FIXTURE
- 3-GANG OUTLET BOX WITH SINGLE GANG COVER FOR PILOT LAMP, SINGLE POLE SWITCH AND DUPLEX CONVENIENCE OUTLET WITH GROUND FAULT INTERRUPTER, ALL SUITABLE FOR USE OUTDOORS
- JUNCTION BOX, CAST METAL WITH THREADED WALLS OR HUBS.
- CONDUIT RUN CONCEALED BELOW GRADE OR FLOOR SLAB. NOTE: ANY CONDUIT RUN NOT OTHERWISE INDICATED SHALL BE 1/2" AND CONTAIN THREE NO. 12 AWG. WIRES. A GREATER NUMBER OF WIRES ARE SHOWN WITH CROSS LINES AS FOLLOWS: THE LONG CROSS LINE INDICATES THE IDENTIFIED GROUNDED NEUTRAL CONDUCTOR AND THE SHORT CROSS LINES INDICATES THE PHASE CONDUCTORS. UNLESS OTHERWISE INDICATED, ALL CONDUCTORS ARE NO. 12 AWG. (GROUND CONDUCTOR)
- CONDUIT RUN INSTALLED EXPOSED ON WALLS OR CEILING. WIRING SHALL BE SAME AS IN NOTE FOR CONCEALED CONDUIT RUN.
- AUXILIARY EMPTY CONDUIT RUN CONCEALED BELOW GRADE OR FLOOR SLAB, SIZED AS INDICATED.
- CONDUIT TERMINATED WITH A PLUGGED COUPLING.
- VALVE TYPE SECONDARY SURGE ARRESTER (L.A.)
- LIGHTNING ARC TERMINAL. EXTEND 4'-0" ABOVE PROTECTED OBJECT
- GROUND ROD
- —F— FACILITY COUNTERPOISE SYSTEM, NO. 1/0 AWG. BARE COPPER WIRE.
- DOWN CONDUCTOR FROM ARC TERMINAL, NO. 2 AWG. BARE COPPER WIRE.

NOTES:

1. HOLES SHALL NOT BE MADE IN STEEL ARCH ROOFING FOR INSTALLATION OF ELECTRICAL WORK.
2. THE CONDUIT SYSTEM ON THE FRONT OF STRUCTURE IS TO HAVE SUPPORTS SPACED NOT MORE THAN 8'-0". SUPPORTS ON EACH SIDE OF CONSTRUCTION JOINTS SHALL NOT EXCEED 5'-0".
3. RUNNING THREAD COUPLING CONNECTIONS ARE NOT PERMITTED FOR THE RIGID CONDUIT SYSTEMS.
4. FOR THE 120/240 VOLT, SINGLE PHASE, 3 WIRE SERVICE, INSTALL A 1 1/2" EMPTY CONDUIT 2'-0" BELOW FINISHED GRADE AND TERMINATE WITH A PLUGGED COUPLING NOT LESS THAN 5'-0" BEYOND PAVED AREA.
5. FOR THE INSTALLATION BY OTHERS OF A TELEPHONE TYPE CABLE, INSTALL 2 1 1/2" CONDUITS WITH PULL WIRE, 2'-0" BELOW FINISHED GRADE AND TERMINATE WITH A PLUGGED COUPLING NOT LESS THAN 5'-0" BEYOND PAVED AREA.
6. THE LIGHTING FIXTURE SHOULD BE HIGH PRESSURE SODIUM TYPE. ALL EXTERIOR LIGHTS SHALL BE CONNECTED ON THE SAME CIRCUIT TO FACILITATE CONTROL AT THE PANELBOARD. HOWEVER, NOT MORE THAN EIGHT FIXTURES SHALL BE CONNECTED TO ANY ONE 20 AMP CIRCUIT.
7. THE NUMBER OF INTERIOR LIGHTING FIXTURES VARIES, DEPENDING ON INTERNAL LENGTH OF MAGAZINE AS FOLLOWS:

LGTH OF MAGAZINE	# OF FIXTURES	LGTH OF MAGAZINE	# OF FIXTURES
20'-24'	4	48'-60'	6
25'-36'	4	61'-89'	8
37'-47'	4		

8. INSTALL AN INTERMEDIATE ARC TERMINAL OVER STRUCTURE WHERE INTERIOR LENGTH OF MAGAZINE EXCEEDS 48'-0" (SEE SHEET 10 OF 10)
9. MOUNT LIGHT FIXTURE IN ORDER TO PROVIDE LIGHT ON MAGAZINE DOORS.

Symbol	Description	Date	Approved
3	GENERAL REVISION/LIGHTNING PROTECTION	12 MAR 80	RWD

Revisions

U.S. ARMY ENGINEER DIVISION, HUNTSVILLE
CORPS OF ENGINEERS
HUNTSVILLE, ALABAMA

Site adapt A/E :

US Army Corps of Engineers

MAGAZINE, STEEL
SEMICIRCULAR-ARCH, EARTH-COVERED

ELECTRICAL PLAN & SECTIONS

Dwn. by : RDP
Ckd. by : WEB
Reviewed by : J.R. Hoffman
Date :
Sheet reference number : E-1
Design file no. : 30094
Rev.
Approved by :
Drawing code : STD 421-80-01
Sheet 10 of 11