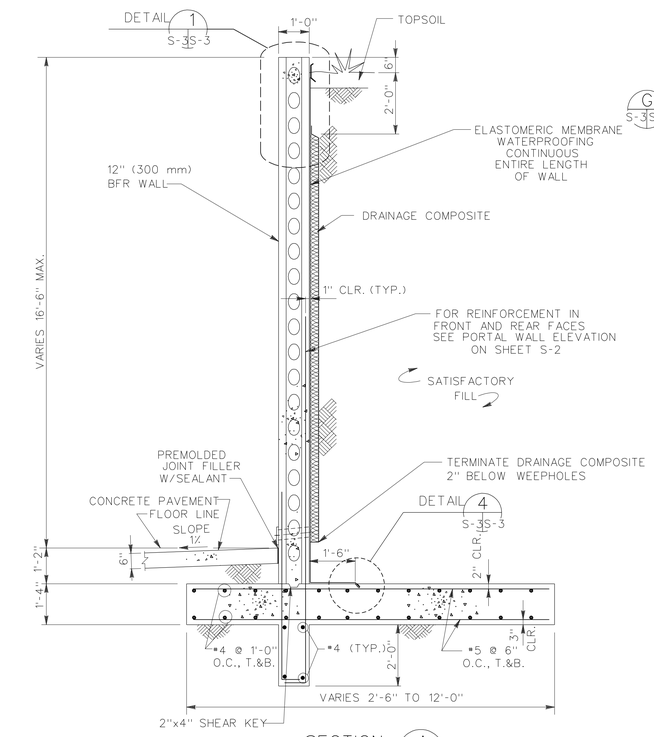

SECTION A (S-2 S-3)
SCALE 1/2"=1'-0"

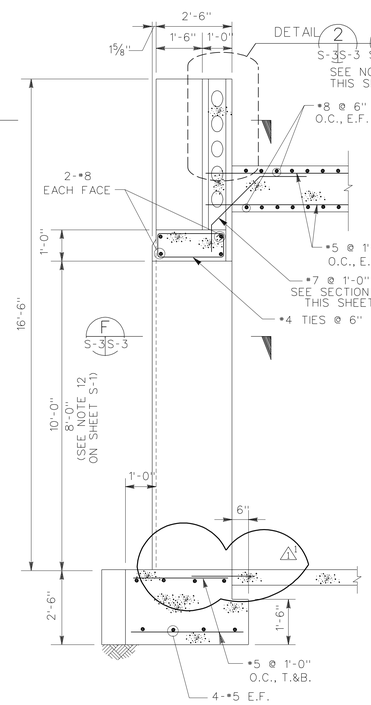

SECTION B (S-2 S-3)
SCALE 1/2"=1'-0"

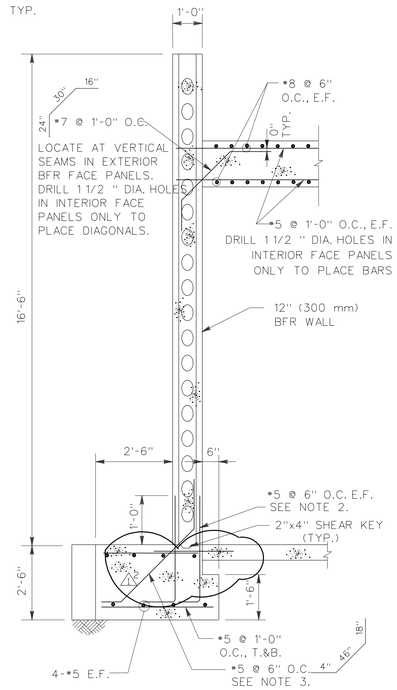

SECTION C (S-2 S-3)
SCALE 1/2"=1'-0"

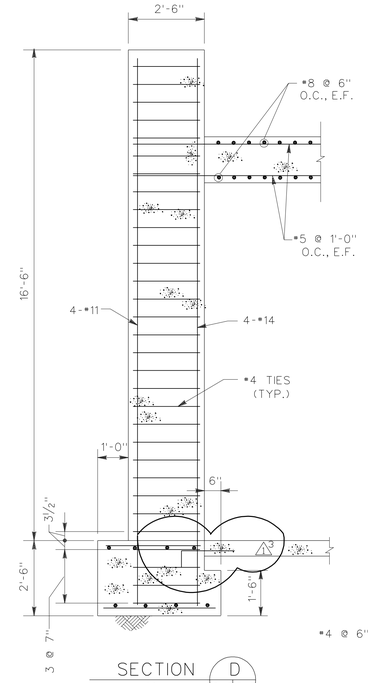

SECTION D (S-2 S-3)
SCALE 1/2"=1'-0"

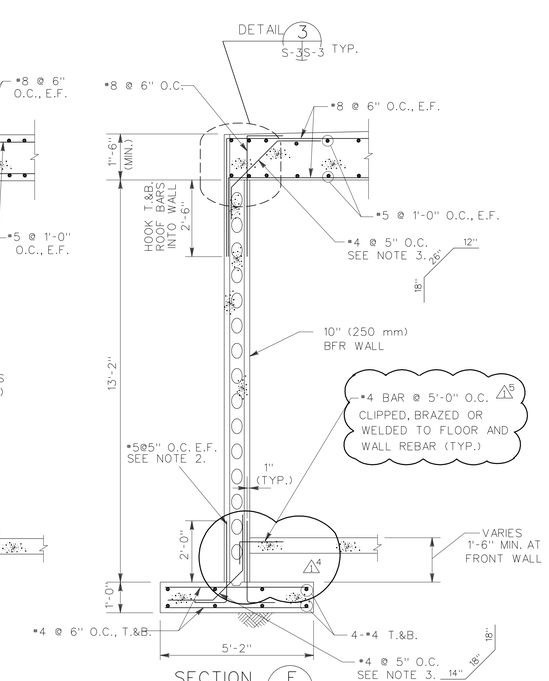

SECTION E (S-2 S-3)
SCALE 1/2"=1'-0"

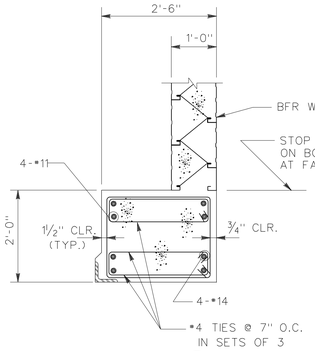

SECTION F (S-3 S-3)
SCALE 3/4"=1'-0"

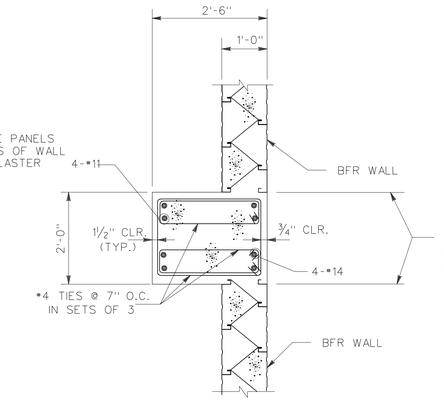

SECTION G (S-3 S-3)
SCALE 3/4"=1'-0"

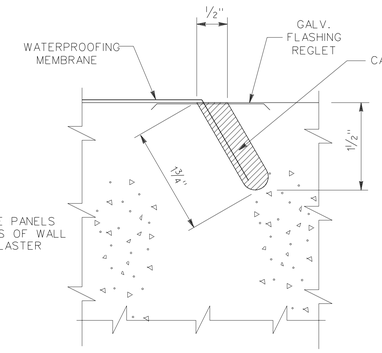

DETAIL 4 (S-3 S-3)
FULL SCALE

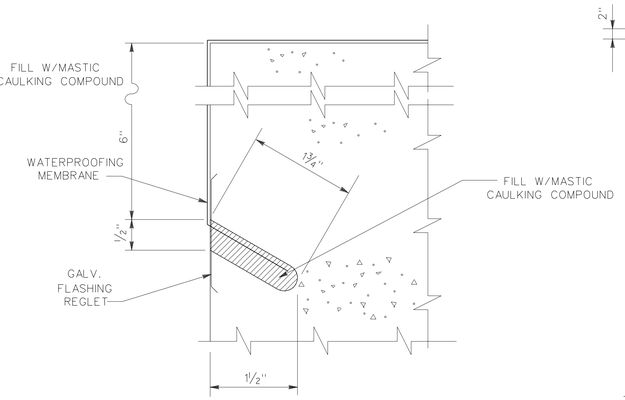

DETAIL 5 (S-1 S-3)
FULL SCALE

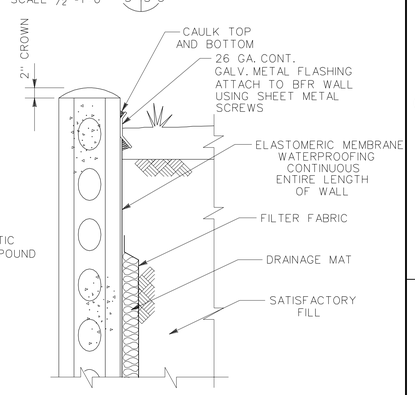

DETAIL 1 (S-3 S-3)
SCALE 1"=1'-0"

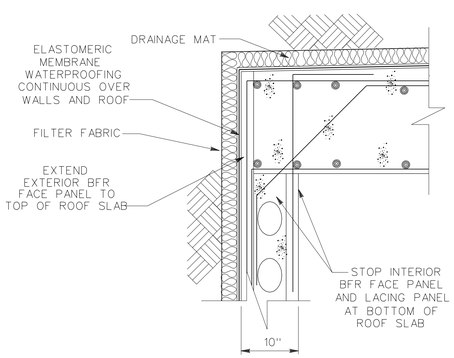

DETAIL 3 (S-3 S-3)
SCALE 1"=1'-0"

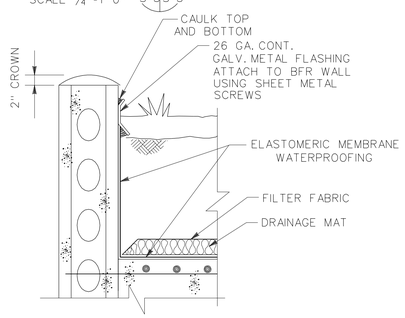

DETAIL 2 (S-3 S-3)
SCALE 1"=1'-0"

REGLET DETAILS

NOTES:

1. USE DETAIL 2 ON THIS SHEET FOR COMPOSITE DRAINAGE SYSTEM. USE DETAIL 2A ON SHEET S-4 FOR SAND AND GRAVEL FILTER FILTER SYSTEM.
2. CONTRACTOR SHALL CAREFULLY LOCATE REBARS BETWEEN THE FOUNDATIONS AND WALLS, SO THE REBARS CLEAR THE BFR STEEL FACE PANELS AND LACING PANELS, BEFORE POURING CONCRETE.
3. LOCATE DIAGONAL REBARS AT THE VERTICAL SEAMS IN THE BFR STEEL FACE PANELS, IN ORDER TO CLEAR THE LACING PANELS.

GRAPHIC SCALES:

Symbol	Description	Date	Approved
1	GENERAL REVISION FOR LIGHTNING PROTCTION	11JUN98	WAW

Revisions

U.S. ARMY ENGINEER DIVISION, HUNTSVILLE
CORPS OF ENGINEERS
HUNTSVILLE, ALABAMA

US Army Corps of Engineers

Site adapt A/E :

MAGAZINE, STEEL AND CONCRETE BOX, EARTH COVERED

SECTIONS AND DETAILS

Dwn. by: RDP	Ckd. by: JMS		
Reviewed by :	Date : 15 DEC 92	Sheet reference number : S-3	Design file no.: 65823 Rev.
Approved by :	Drawing code : STD 421-80-02		Sheet 4 of 11

421800253.DGN