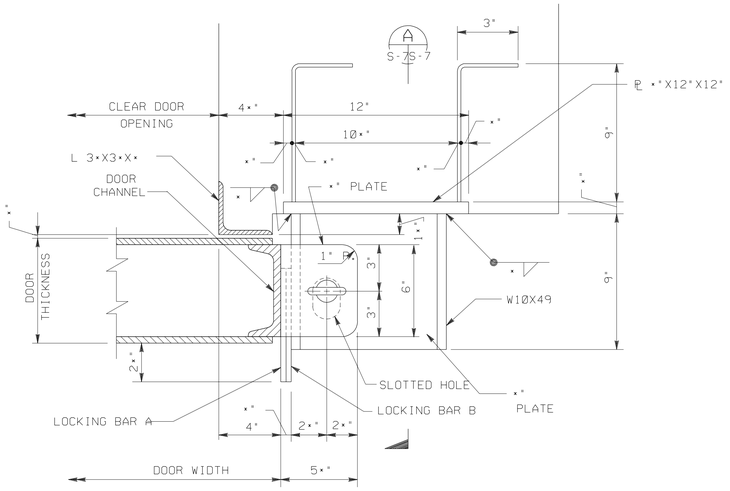

PLAN
SCALE: 3"=1'-0"

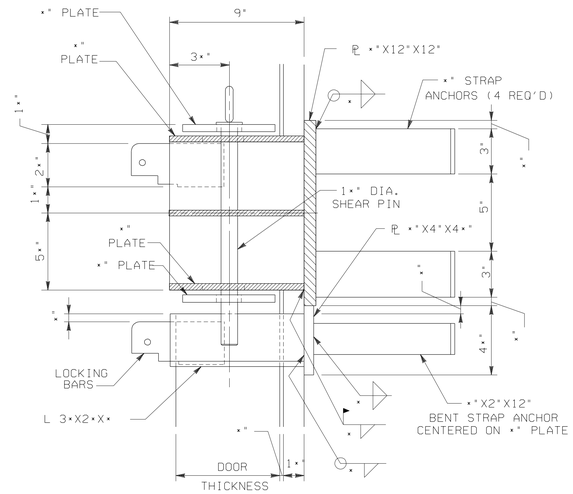

SECTION A
SCALE: 3"=1'-0"

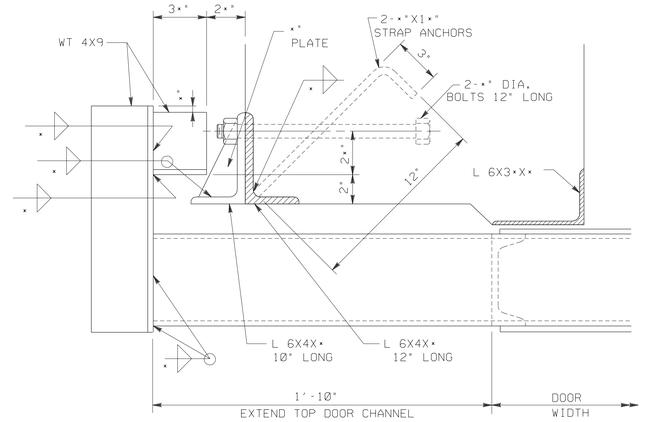

PLAN

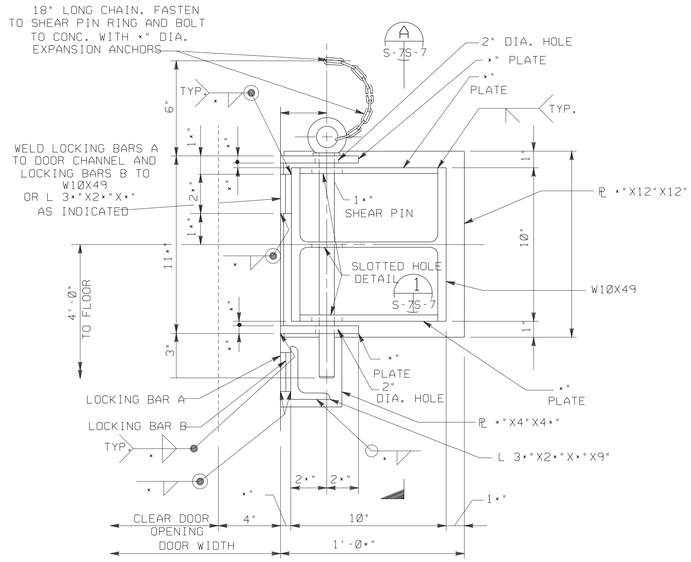

ELEVATION
SCALE: 3"=1'-0"

RESTRAINING BRACKET DETAILS

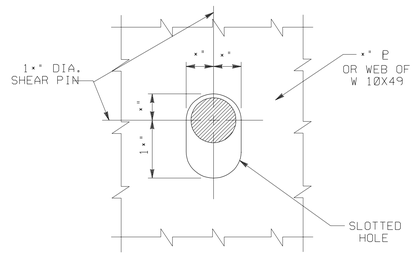

DETAIL 1
NO SCALE
S-7 1 S-7

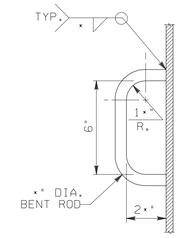

DOOR HANDLE
SCALE: 3"=1'-0"

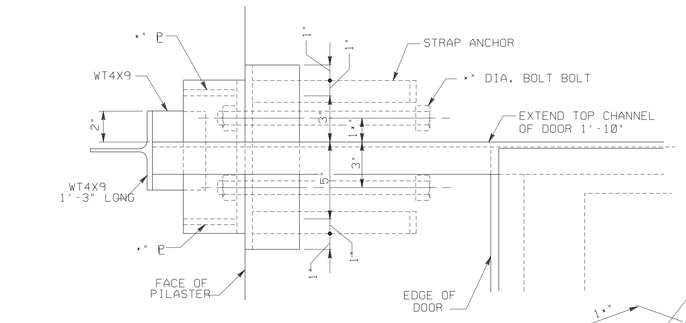

ELEVATION

DETAIL 5
SCALE: 3"=1'-0"
S-6 5 S-7

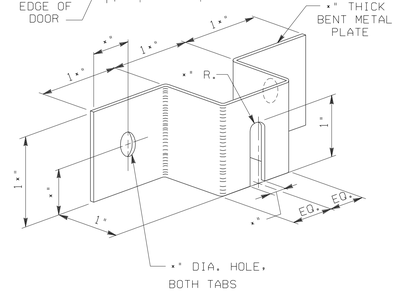

CHAIN GUIDE AND HOLDER
NO SCALE

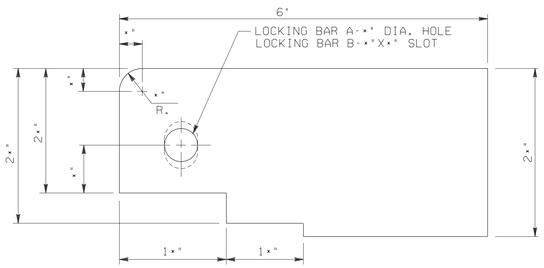

LOCKING BAR 'A'-" THICK
LOCKING BAR 'B'-" THICK
2 EACH REQUIRED

LOCKING BARS
NO SCALE

LOCKING BARS TO CONFORM TO MILITARY SPECIFICATION MIL-H-43905A

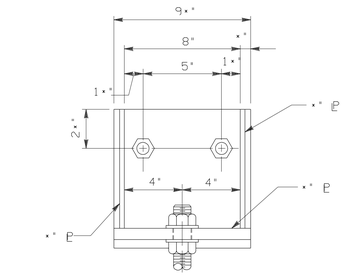

ELEVATION

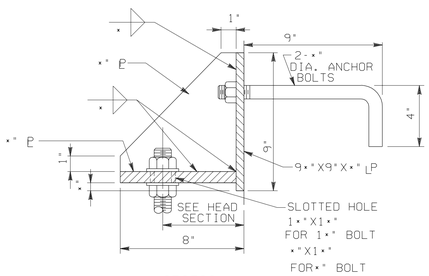

SECTION

TRACK SUPPORT BRACKET
TYPE I
SCALE: 3"=1'-0"

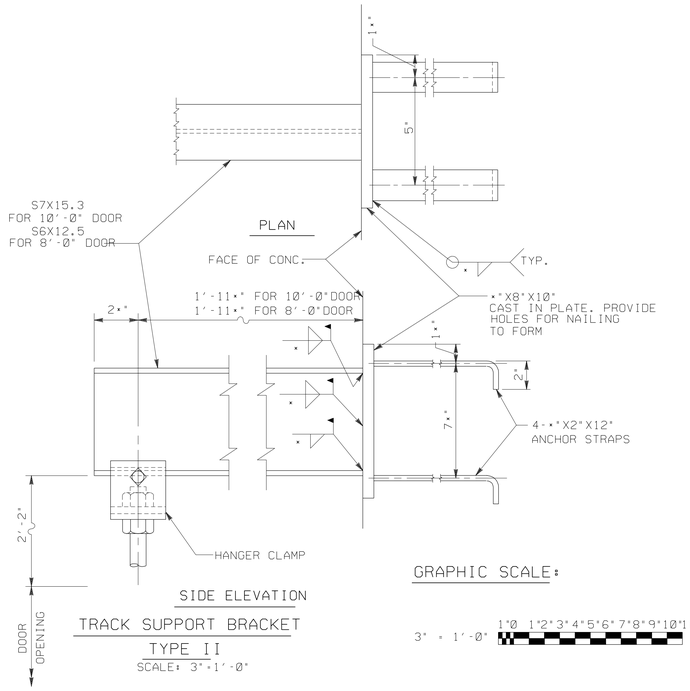

SIDE ELEVATION

TRACK SUPPORT BRACKET
TYPE II
SCALE: 3"=1'-0"

GRAPHIC SCALE:
3" = 1'-0" 1'0 1'2'3'4'5'6'7'8'9'10'11"

Symbol	Description	Date	Approved
	Revisions		

U.S. ARMY ENGINEER DIVISION, HUNTSVILLE
CORPS OF ENGINEERS
HUNTSVILLE, ALABAMA

Site adapt A/E :

US Army Corps of Engineers

MAGAZINE, STEEL
OVAL-ARCH, EARTH COVERED
BLAST DOOR DETAILS

Dwn. by: RP | Ckd. by: AF

Reviewed by :

Approved by :

Date : 30 OCT 92

Drawing code : STD 421-80-03

Sheet reference number : S-7

Design file no.: 65862

Rev.

Sheet 8 of 10

4218003S7.DGN

THIS DRAWING SUPERSEDES STD 33-15-73