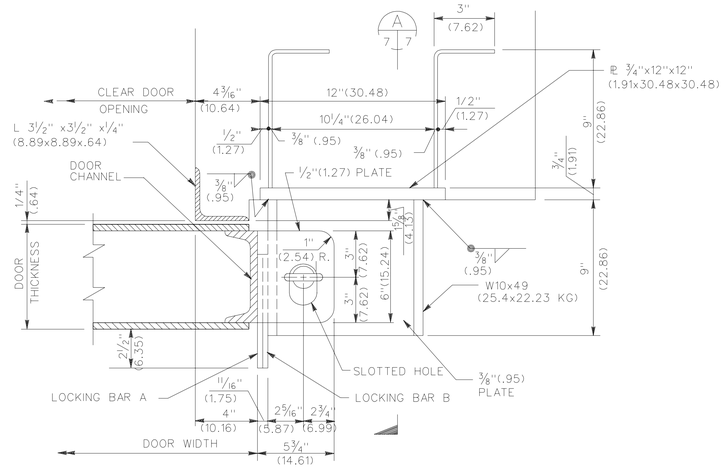

PLAN
SCALE: 3"=1'-0" (1 = 4)

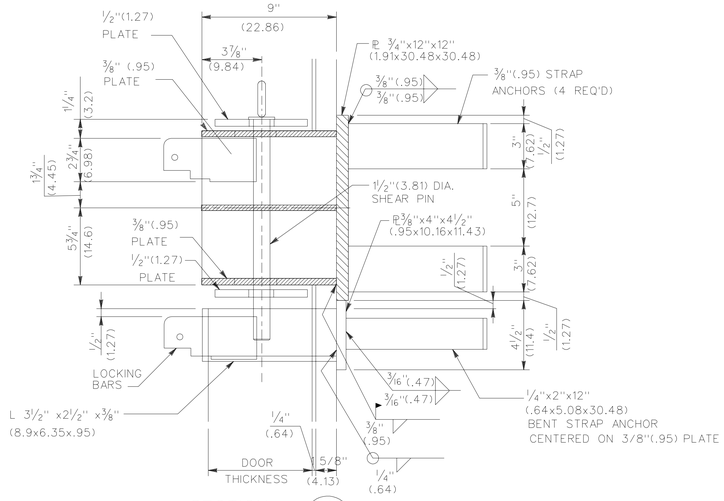

SECTION A
SCALE: 3"=1'-0" (1 = 4)

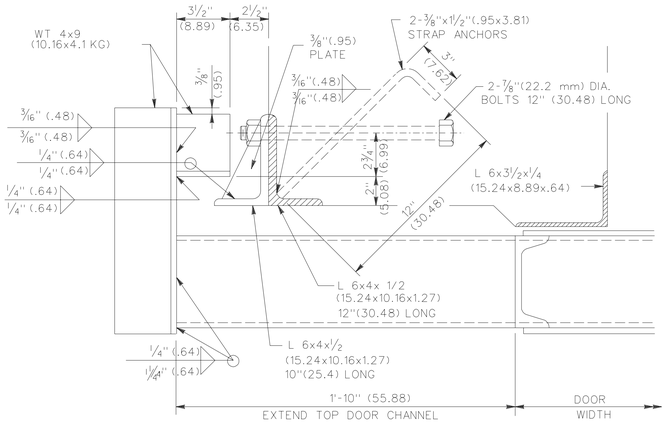

PLAN

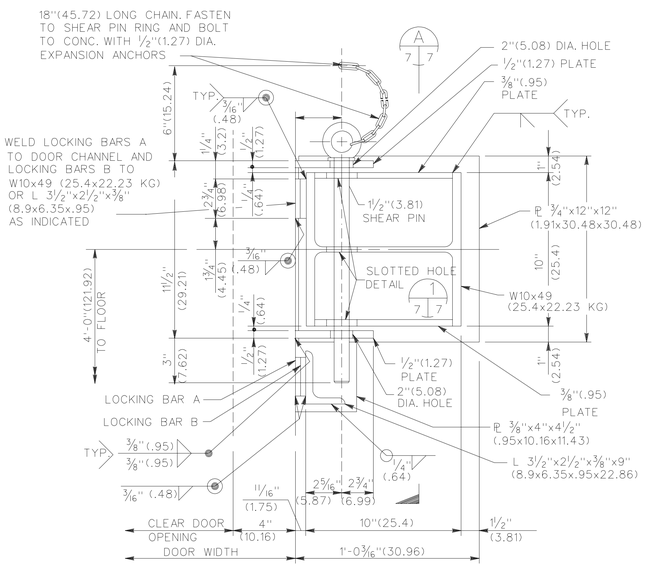

ELEVATION
SCALE: 3"=1'-0" (1 = 4)

RESTRAINING BRACKET DETAILS

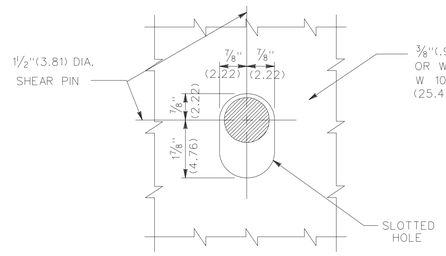

DETAIL 1
NO SCALE

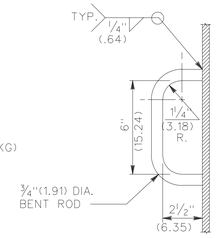

DOOR HANDLE
SCALE: 3"=1'-0" (1 = 4)

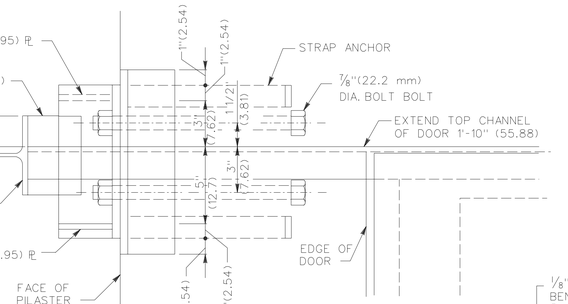

ELEVATION

DETAIL 5
SCALE: 3"=1'-0" (1 = 4)

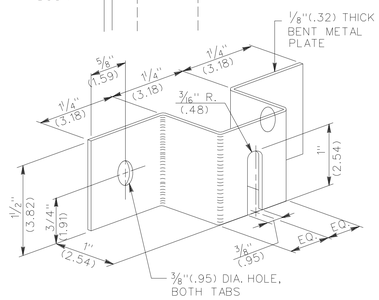

CHAIN GUIDE AND HOLDER
NO SCALE

THE METRIC DIMENSIONS (BETWEEN THE PARENTHESIS) ARE IN CENTIMETERS ON THIS DRAWING, UNLESS OTHERWISE NOTED.

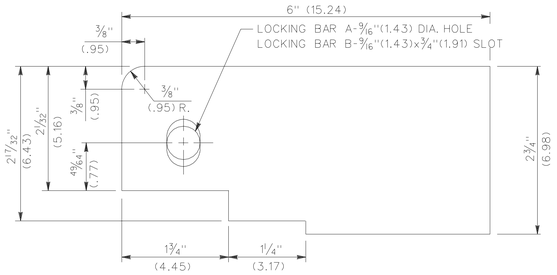

LOCKING BARS
NO SCALE
LOCKING BARS TO CONFORM TO MILITARY SPECIFICATION MIL-H-43905A

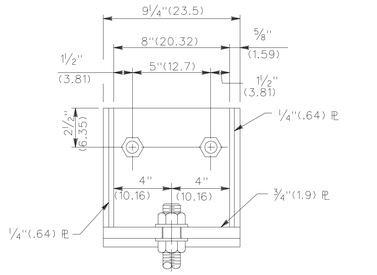

ELEVATION

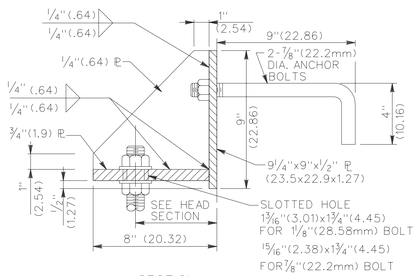

SECTION

TRACK SUPPORT BRACKET
TYPE I
SCALE: 3"=1'-0" (1 = 4)

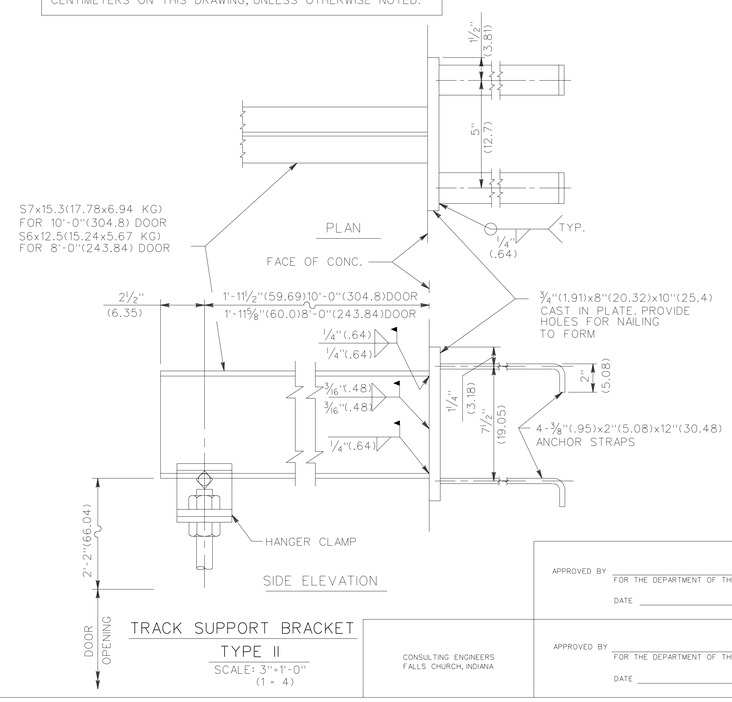

TRACK SUPPORT BRACKET
TYPE II
SCALE: 3"=1'-0" (1 = 4)

NOTE:
TITLE BLOCK CHANGED BY NATHAN C. HALE ASSOCIATES TO DEPICT CONCRETE ARCH. REMAINING INFORMATION TRANSFERRED INTACT FROM O.C.E. DRAWING NO.33-15-73 SHEET S7.

SYMBOL	DESCRIPTION	DATE	APPROVAL
1	GENERAL REVISION/SIMONS-EASTERN CO.	19JUL84	JYM

BLACK & VEATCH
CONSULTING ENGINEERS
KANSAS CITY, MISSOURI

DEPARTMENT OF THE ARMY
OFFICE OF THE CHIEF OF ENGINEERS
MILITARY CONSTRUCTION - ENGINEERING DIVISION
WASHINGTON, D.C.

DRAWN BY: G.I.C.
TRACED BY: G.I.C.
CHECKED BY: H.D.L.
SUBMITTED BY: W.V. HILL
APPROVED: O.F.M.
CHIEF ADV. TECH. BR.

MAGAZINE, PRECAST CONCRETE, EARTH COVERED
MISCELLANEOUS BLAST DOOR DETAILS

APPROVED: LEE S. GARRETTE
CHIEF ENGINEERING DIVISION MIL. PROGR., O.C.E.
DATE: 11APR79

APPROVED FOR:
DATE:

File design number: 84223
File name: 6951s7.dgn
DRAWING NUMBER 421-80-05
SHEET S-7

CONSULTING ENGINEERS
FALLS CHURCH, INDIANA

APPROVED BY _____ FOR THE DEPARTMENT OF THE NAVY
DATE _____

APPROVED BY _____ FOR THE DEPARTMENT OF THE AIR FORCE
DATE _____

6951S7.Dgn