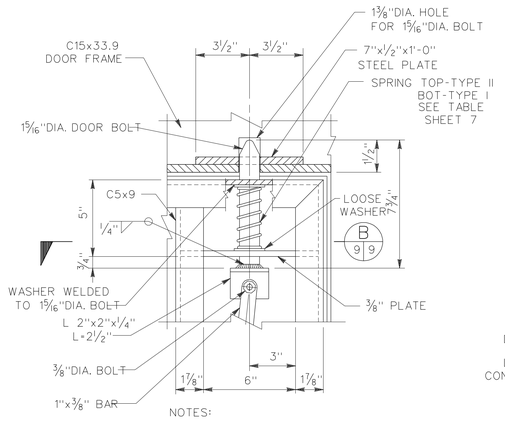

NOTES:

1. 16 GA. PLATE AND ⅛" COVER PLATE NOT SHOWN.
2. BOLT DETAIL AT BOTTOM SIMILAR

INSIDE ELEVATION

DETAIL 2 (8 | 9)
SCALE 3"=1'-0"

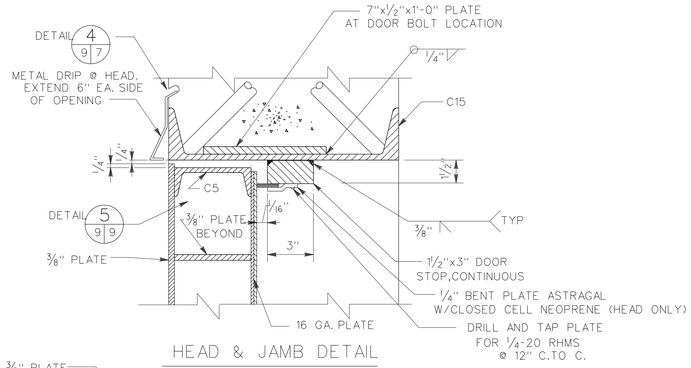

HEAD & JAMB DETAIL

SCALE 3"=1'-0"

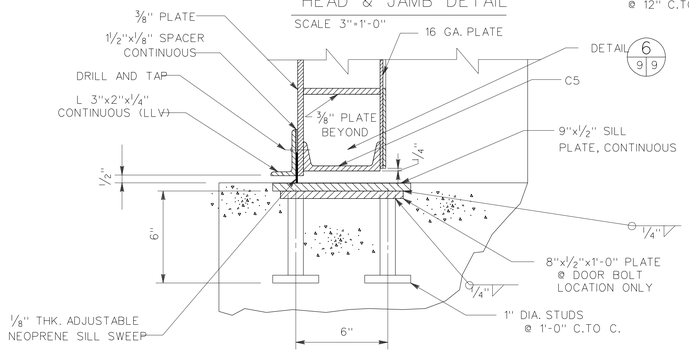

SILL DETAIL

SCALE 3"=1'-0"

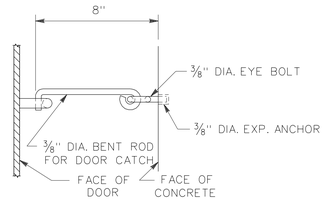

NOTE:
DOOR CATCH TO HOOK INTO ⅝" DIA. STAPLE FOR LOCK WHEN DOOR IS OPEN.

DETAIL 1 (3 | 9)
SCALE 3"=1'-0"

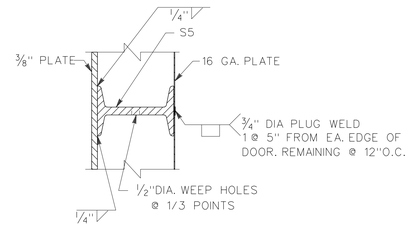

DETAIL 4 (8 | 9)
SCALE 3"=1'-0"

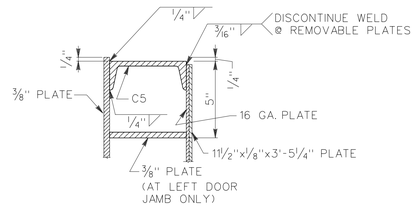

DOOR HEAD DETAIL 5 (9 | 9)
SCALE 3"=1'-0"

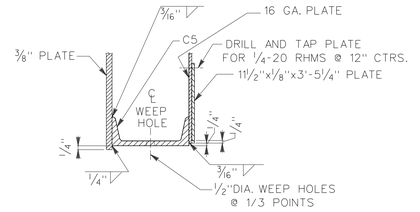

DOOR SILL DETAIL 6 (9 | 9)
SCALE 3"=1'-0"

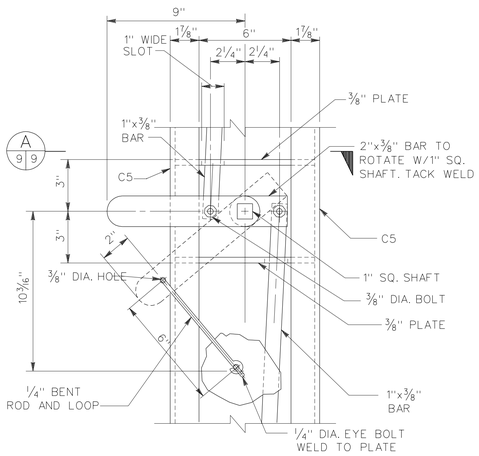

INSIDE ELEVATION

DETAIL 3 (8 | 9)
SCALE 3"=1'-0"

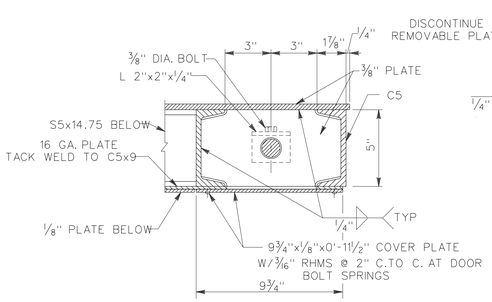

SECTION B (9 | 9)
SCALE 3"=1'-0"

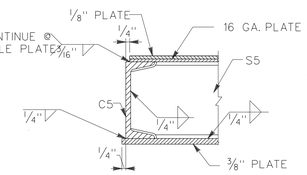

DETAIL 7 (8 | 9)
SCALE 3"=1'-0"

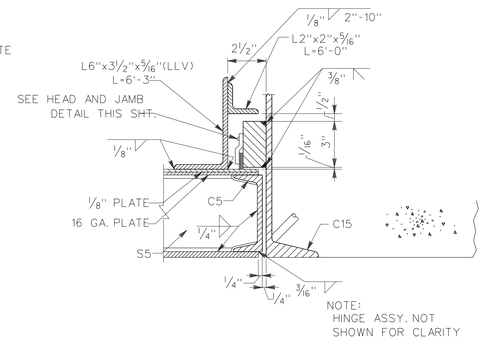

NOTE:
HINGE ASSY. NOT SHOWN FOR CLARITY

DETAIL 8 (8 | 9)
SCALE 3"=1'-0"

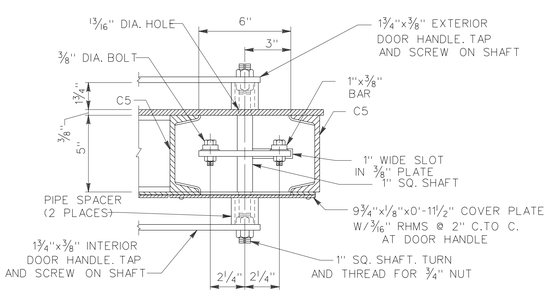

SECTION A (9 | 9)
SCALE 3"=1'-0"

NOTE: NUTS FOR DOOR HANDLES TO BE ONE-PIECE, SPRING ACTION, ALL METAL REUSABLE LOCKNUTS.

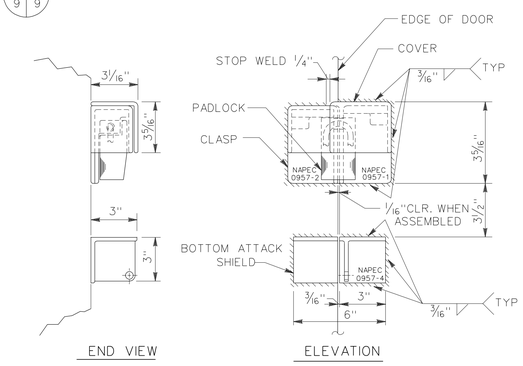

HIGH SECURITY HASP (MIL-H-29181)

N.T.S.

GRAPHIC SCALE

3" = 1'-0" 1" 0 1" 2" 3" 4" 5" 6" 7" 8" 9" 10" 11"

Symbol	Description	Date	Approved

Revisions

U.S. ARMY ENGINEER DIVISION,
HUNTSVILLE
CORPS OF ENGINEERS
HUNTSVILLE, ALABAMA

Site adapt A/E :

US Army Corps of Engineers

MAGAZINE, CONCRETE, CUBICLE
EARTH - COVERED
SECTIONS AND DETAILS

Dwn. by : RDP
Ckd. by : AF
Reviewed by :
Approved by :
Date :
Drawing code : STD 422-15-01
Sheet reference number : 9
Design file no. : 20209
Rev.
Sheet 9 of 10