FLOODLIGHT PHOTOMETRIC DATA
(SEE NOTE BELOW RIGHT)

HORIZONTAL ANGLE-DEGREES

VERTICAL ANGLE-DEGREES	0	10	20	30	40	50	60	70	80	90	LUMENS-SUMMATION OF ONE SIDE ONLY
72	132 / 3	109 / 3	95 / 2	84 / 2	88 / 2	83 / 1	79 / 1	48 / 0	0 / 0		13
64	193 / 5	146 / 3	134 / 3	146 / 3	180 / 3	116 / 2	110 / 1	72 / 0	0 / 0		20
56	211 / 5	331 / 8	265 / 6	378 / 8	406 / 8	334 / 7	145 / 1	95 / 1	0 / 0		44
48	1055 / 26	1065 / 25	1187 / 26	1146 / 25	1219 / 21	1090 / 15	302 / 3	119 / 1	0 / 0		140
40	2016 / 49	2053 / 48	2072 / 46	2036 / 41	2051 / 35	1539 / 21	645 / 7	138 / 0	0 / 0		248
32	2582 / 63	2757 / 65	2914 / 64	2714 / 54	2470 / 43	1925 / 27	351 / 10	156 / 1	0 / 0		346
24	3657 / 94	4354 / 102	4796 / 106	4350 / 86	2854 / 49	2339 / 31	1219 / 12	171 / 1	0 / 0		482
16	6103 / 148	7492 / 176	8178 / 180	8711 / 184	5312 / 97	2486 / 35	1408 / 16	185 / 1	0 / 0		746
8	8390 / 203	10350 / 243	11701 / 258	9051 / 180	5717 / 64	2849 / 37	1549 / 16	191 / 1	0 / 0		1005
0	10651 / 258	12004 / 282	13983 / 308	10327 / 204	4018 / 49	2741 / 38	1682 / 17	175 / 1	0 / 0		1180
8	10285 / 249	12100 / 284	14690 / 324	10194 / 203	4062 / 70	2741 / 38	1829 / 17	195 / 1	0 / 0		1187
16	7784 / 189	10557 / 248	12914 / 285	8661 / 175	5850 / 66	2656 / 37	1366 / 16	187 / 1	0 / 0		1015
24	5824 / 141	7744 / 185	8752 / 195	6409 / 128	3906 / 40	2506 / 35	1453 / 15	178 / 1	0 / 0		795
32	4003 / 97	4568 / 107	5081 / 111	4507 / 86	3084 / 53	2265 / 32	1241 / 13	167 / 1	0 / 0		499
40	2958 / 72	3099 / 73	3178 / 70	2932 / 58	2369 / 45	1972 / 28	976 / 10	152 / 1	0 / 0		354
48	2386 / 58	2344 / 56	2359 / 52	2294 / 46	2085 / 36	1570 / 22	662 / 7	154 / 1	0 / 0		276
56	1263 / 31	1264 / 30	1356 / 29	1502 / 26	1280 / 22	1101 / 15	388 / 5	113 / 1	0 / 0		157
64	287 / 7	425 / 10	341 / 8	499 / 9	524 / 9	341 / 8	144 / 1	50 / 1	0 / 0		52
72	154 / 4	174 / 4	175 / 4	176 / 4	170 / 3	118 / 2	105 / 1	60 / 0	0 / 0		22
	96 / 2	105 / 2	97 / 2	87 / 2	74 / 1	78 / 1	68 / 1	41 / 0	0 / 0		12
	1705	1955	2077	1470	716	432	166	17	0		8534

LUMENS-SUMMATION OF VERTICAL ZONES

BEAM SPREAD: 127.8 °H x 96.9 °V	
MAX. LUMINOUS INTENSITY: 16332 CANDELAS	
AVG. MAX. LUMINOUS INTENSITY: 13138 CANDELAS	
BEAM FLUX: 15728 LUMENS	TOTAL FLUX: 17068 LUMENS
BEAM EFFICIENCY: 57.2%	TOTAL EFFICIENCY: 62.1%

ISOCANDELA CURVES

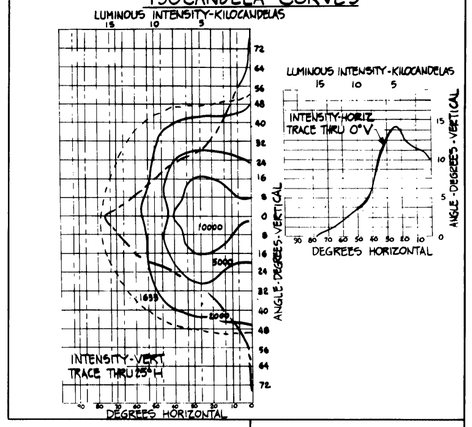

NOTE:
ANGULAR DATA IS SHOWN WITH THE POLAR AXIS HORIZONTAL. LUMINOUS INTENSITY IN CANDELAS AT CENTERS OF ZONES. LUMINOUS FLUX IN LUMENS IN ZONES.

LAMP DATA

LIGHT SOURCE	HIGH PRESSURE SODIUM
LAMP TYPE	LU250/6
WATTS	250
INITIAL LUMENS	30,000
RATED AVERAGE LIFE	24,000 HRS.

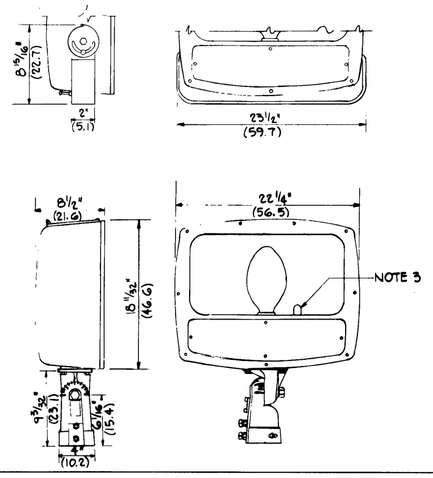

FIXTURE TYPE FHPS-250 △3

THE LUMINAIRE SHALL BE A HEAVY-DUTY WEATHERPROOF FLOODLIGHT CONSISTING OF A DIE-CAST ALUMINUM HOUSING, ANODIZED ALUMINUM REFLECTOR, TEMPERED HEAT AND SHOCK RESISTANT CLEAR GLASS AND EQUIPPED WITH AN INTEGRAL CAST ALUMINUM KNUCKLE-TYPE SLIPFITTER WITH CONCEALED WIRING AND VERTICAL DEGREE MARKINGS. WHERE MOUNTING IS TO BE ON WOOD POLES, THE LUMINAIRE SHALL BE EQUIPPED WITH A HEAVY GAUGE GALVANIZED STEEL TRUNNION WITH VERTICAL DEGREE MARKINGS.

THE FRONT HOUSING SHALL BE HINGED TO ALLOW EASY ACCESS TO LAMP AND COMPONENTS.

THE EFFECTIVE PROJECTED AREA OF THE LUMINAIRE SHALL BE NOT GREATER THAN 2.75SQ. FT. (0.26 SQ. METERS) AND HAVE A NET WEIGHT NOT GREATER THAN 42 POUNDS (19 KILOGRAMS).

THE LUMINAIRE SHALL BE EQUIPPED WITH A THERMALLY PROTECTED BALLAST RATED FOR -20°F (-28.88C) STARTING IN COLD WEATHER OPERATION TO OPERATE A 250 WATT HIGH PRESSURE SODIUM LAMP. THE BALLAST DESIGN SHALL INCLUDE CIRCUITRY TO AUTOMATICALLY ACTIVATE THE QUARTZ LAMP UNTIL THE H.P.S. LAMP REACHES APPROXIMATELY 60 PERCENT LIGHT OUTPUT FOR AR 50-5 SITES. THE BALLAST CHARACTERISTICS SHALL BE AS FOLLOWS:

CHARACTERISTICS	AREAS WITH 50 HERTZ POWER	AREAS WITH 60 HERTZ POWER
TYPE	REACTOR	AUTO-REGULATOR
LINE VOLTAGE	220	277
POWER FACTOR	.90	.95
INPUT VOLTAGE DIP	15 - 20%	40 - 50%
LINE VOLTAGE VARIATION	5%+-	10%+-

THE LUMENS AND CANDELA VALUES INDICATED ABOVE ARE TO BE CONSIDERED MINIMUM VALUES OBTAINED WITH STANDARD LAMPS AT RATED VOLTAGE.

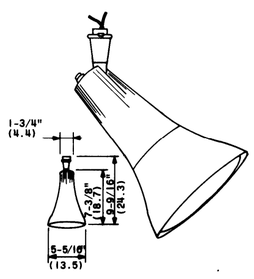

OUTDOOR LIGHTING LAMPHOLDER △3

THE OUTDOOR LIGHTING LAMPHOLDER SHALL BE DIE-CAST ALUMINUM, FULL SKIRTED, AND SUITABLE FOR LAMPS UP TO 300 WATT PAR-38. THE LAMPHOLDER SHALL HAVE A 1/2" (1.27) THREADED STEM, BE FULLY ADJUSTABLE, BE COMPLETELY ASSEMBLED, BE FULLY WIRED AND HAVE 8" (10) STRIPPED LEADS. THE FINISH SHALL BE BAKED ACRYLIC EPOXY OVER ZINC PHOSPHATE PRIMER. FOR MOUNTING THE LAMPHOLDER, A TYPE FS, SINGLE GANG, CAST DEVICE BOX FOR 3/4" (1.9) THREADED RIGID CONDUIT SHALL BE PROVIDED COMPLETE WITH A GASKETED DIE-CAST ALUMINUM COVER PLATE HAVING A 1/2" (1.27) TAPPED HOLE. AN EPOXY-ENCAPSULATED BALLAST FOR REMOTE INSTALLATION SHALL BE FURNISHED. THE BALLAST SHALL BE SUITABLE FOR OUTDOOR INSTALLATION, BE THERMALLY PROTECTED AND RATED FOR -20°F (-28.88C) STARTING IN COLD WEATHER OPERATION TO OPERATE A 100 WATT MERCURY LAMP. THE BALLAST CHARACTERISTICS SHALL BE AS FOLLOWS:

CHARACTERISTICS	AREAS WITH 50 HERTZ POWER	AREAS WITH 60 HERTZ POWER
TYPE	REACTOR	AUTO-REGULATOR
LINE VOLTAGE	220	277
POWER FACTOR	.90	.95
INPUT VOLTAGE DIP	15 - 20%	40 - 50%
LINE VOLTAGE VARIATION	5%+-	10%+-

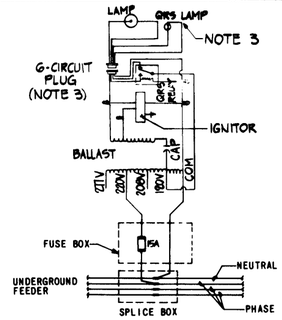

WIRING DIAGRAM

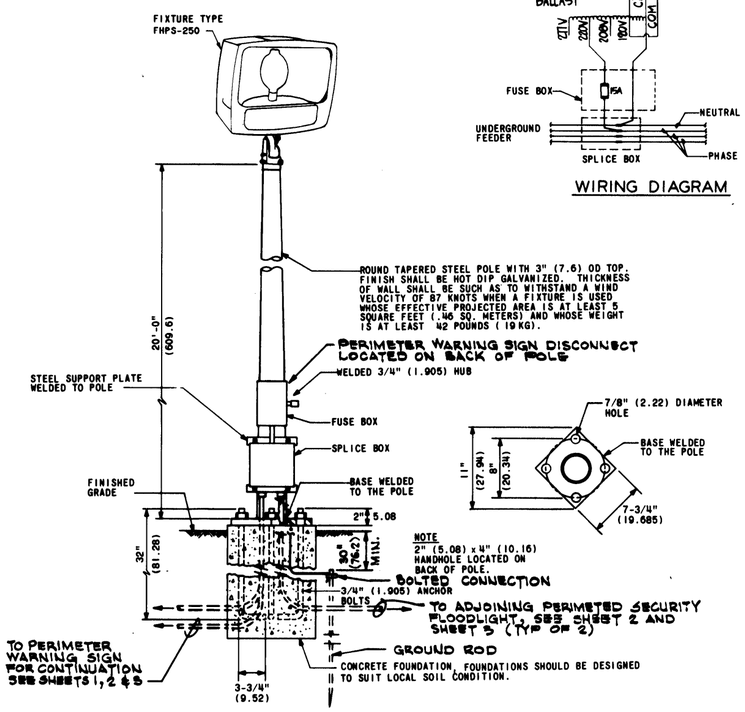

TYPICAL PERIMETER SECURITY FLOODLIGHT INSTALLATION DETAIL WITH STEEL POLE △3
NOT TO SCALE

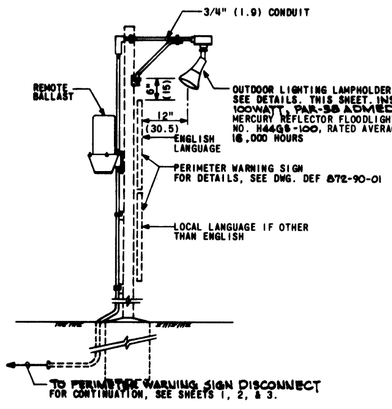

ILLUMINATING A TYPICAL PERIMETER WARNING SIGN △3
NOT TO SCALE

FHPS-150

LAMP: 150 WATT HIGH PRESSURE SODIUM LAMP RATED 16,000 LUMENS. FOOTCANDLE BASED ON 8' MOUNTING HT

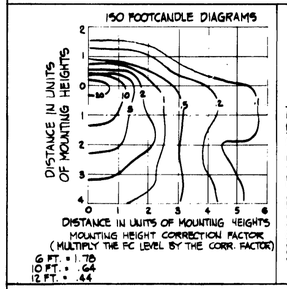

FLUX DISTRIBUTION

DOWNWARD	LUMENS	% OF LAMPS
FRONT	8,624	53.9
REAR	1,376	8.6
TOTAL	10,000	62.5

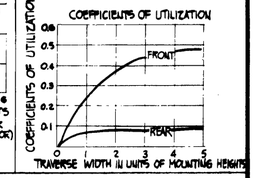

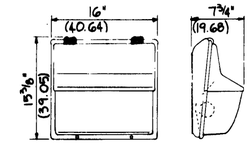

FIXTURE TYPE FHPS-150 △3
NO SCALE

SIMILAR TO SD 40-06-04, SHEET 46
THE FIXTURE SHALL BE A HEAVY DUTY WEATHER-PROOF LIGHT CONSISTING OF A DIE-CAST, CORROSION RESISTANT HOUSING, SPECULAR ALUMINUM REFLECTOR, PRISMATIC BOROSILICATE GLASS REFRACTOR AND ADJUSTABLE SOCKET. FINISH SHALL BE BAKED, OIL-FREE POLYESTER ENAMEL. THE FIXTURES SHALL BE SURFACE MOUNTED ON A 3" OR 4" OUTLET BOX, SURFACE MOUNTED 5/8" TOP CONDUIT ENTRANCE, SURFACE MOUNTED OR FEED THRU WITH THRU WIRE CONDUIT TEE. THE FIXTURE SHALL BE UL LISTED SUITABLE FOR WET LOCATIONS.

CHARACTERISTICS	AREAS W/ 50 HZ POWER	AREAS W 60 HZ POWER
TYPE	REACTOR	AUTO-REGULATOR
LINE VOLTAGE	220	277
POWER FACTOR	.90	.95
INPUT VOLTAGE DIP	15-20%	40-50%
LINE VOLTAGE VARIATION	5%±	10%±

NOTES:

1. FOR REFERENCE MATERIAL, RELATED DRAWINGS AND LIGHTING DESIGN GUIDES REFER TO SHEET 1.
2. UNLESS OTHERWISE INDICATED, THE PARENTHETIC METRIC DIMENSIONS SHOWN ARE IN CENTIMETERS AND ARE MINIMUM ACCEPTABLE.
3. △ FOR AR 50-5 SITES PROVIDE QUARTZ RESTRIKE SYSTEM WITHIN FIXTURE.

SYMBOL	DESCRIPTION	BY	DATE	APPROVAL
△	GENERAL REVISIONS	HSMM	1/86	

REVISIONS

BLACK & VEATCH
CONSULTING ENGINEERS
KANSAS CITY, MISSOURI

DEPARTMENT OF THE ARMY
OFFICE OF THE CHIEF OF ENGINEERS
MILITARY CONSTRUCTION — ENGINEERING DIVISION
WASHINGTON, D.C.

DRAWN BY: PZ
TRACED BY: PZ
CHECKED BY: NJA
SUBMITTED: MLL
APPROVED: REVISIONS APPROVED: DATE: 3/27/87
APPROVED FOR:
DATE:

WEAPONS STORAGE AREA
SECURITY LIGHTING SYSTEM
LIGHTING FIXTURE DETAILS

SCALE: AS NOTED SPEC. NO. NONE
DRAWING NUMBER △ DEF 812-30-01
SHEET 6 OF 8