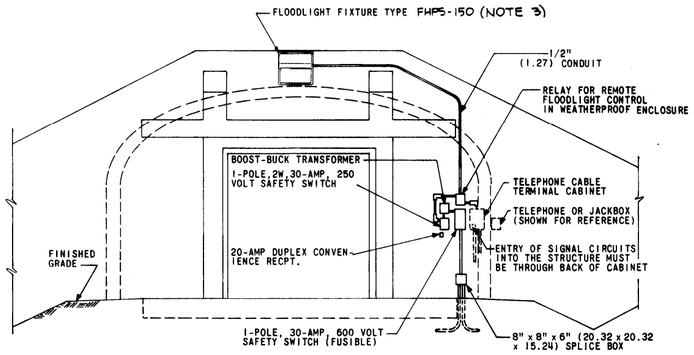

ELEVATION
TYPICAL EXISTING STORAGE MAGAZINE △
NOT TO SCALE

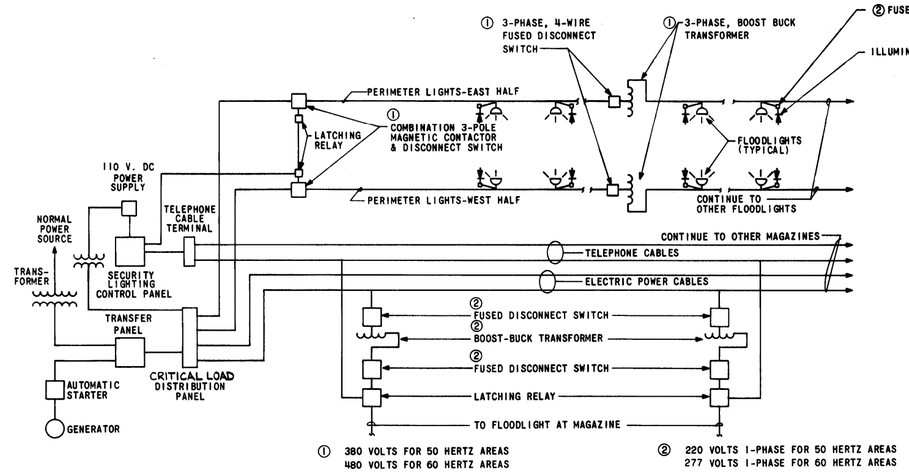

ELECTRICAL ONE LINE DIAGRAM △

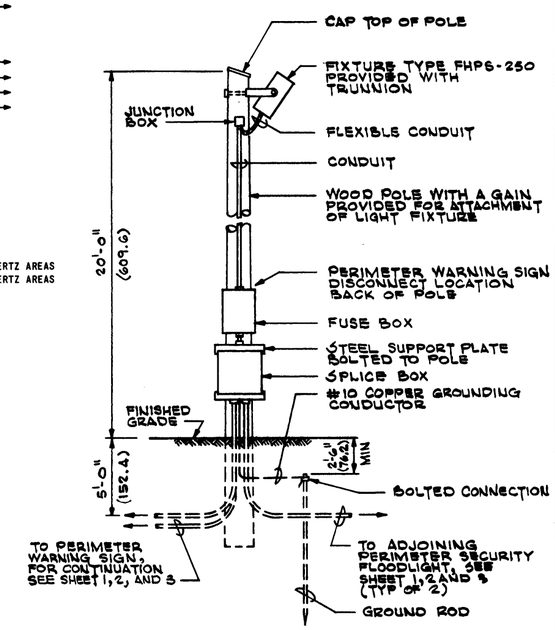

TYPICAL PERIMETER SECURITY FLOODLIGHT INSTALLATION DETAIL △
WITH WOOD POLE
NOT TO SCALE

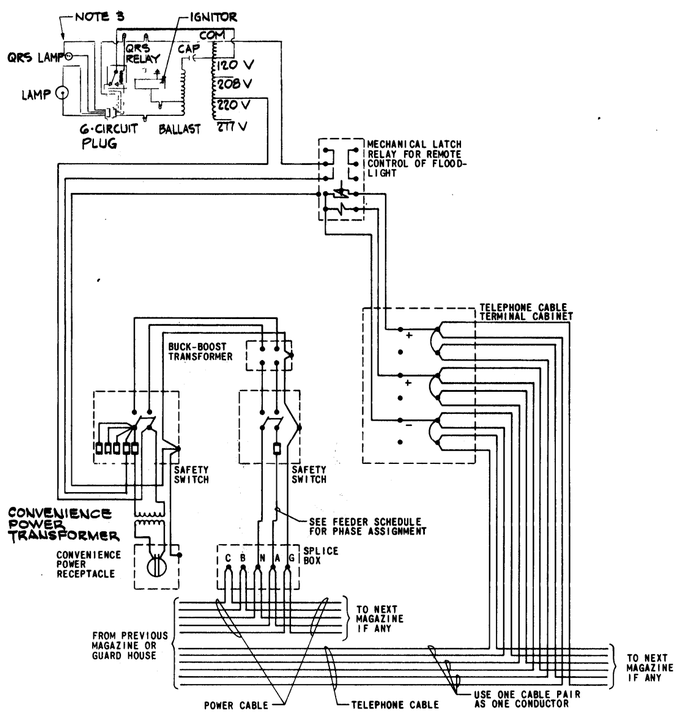

TYPICAL MAGAZINE SECURITY LIGHTING WIRING DIAGRAM △

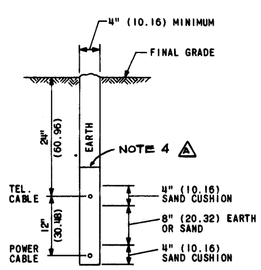

CABLE BURIAL METHOD TYPE I
NOT TO SCALE

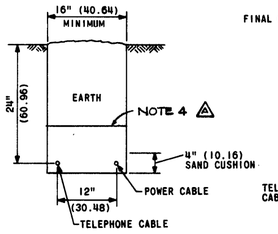

CABLE BURIAL METHOD TYPE II
NOT TO SCALE
(SUITABLE WHEN EARTH DEPTH IS LIMITED)

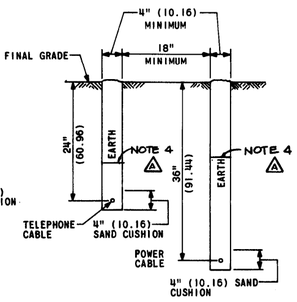

CABLE BURIAL METHOD TYPE III
NOT TO SCALE
(SUITABLE WHEN POWER AND TELEPHONE CABLES ARE INSTALLED AT DIFFERENT TIME)

△ NOTES:

1. FOR REFERENCE MATERIAL, RELATED DRAWINGS AND LIGHTING DESIGN GUIDES, REFER TO SHEET-1.
2. UNLESS OTHERWISE INDICATED, THE PARENTHETIC METRIC DIMENSIONS SHOWN ARE IN CENTIMETERS AND ARE MINIMUM ACCEPTABLE.
3. FOR AR 50-5 SITES, PROVIDE QUARTZ RESTRIKE SYSTEM WITHIN FIXTURE.
4. PROVIDE METALLIC IDENTIFICATION TAPE IN BACKFILL 18" BELOW FINISHED GRADE.

SYMBOL	DESCRIPTION	BY	DATE	APPROVAL
△	GENERAL REVISIONS	HSMM	1/86	

REVISIONS

BLACK & VEATCH
CONSULTING ENGINEERS
KANSAS CITY, MISSOURI

DEPARTMENT OF THE ARMY
OFFICE OF THE CHIEF OF ENGINEERS
MILITARY CONSTRUCTION — ENGINEERING DIVISION
WASHINGTON, D. C.

DRAWN BY: PZ
TRACED BY: PZ
CHECKED BY: NJA
SUBMITTED: MLL
APPROVED:
CHIEF, MIL. TECH. BR.
REVISIONS APPROVED: DATE: 3/17/87
CHIEF, MIL. DIV.

WEAPONS STORAGE AREA
SECURITY LIGHTING SYSTEM
WIRING DIAGRAMS AND LIGHTING FIXTURE DETAIL

APPROVED FOR:
DATE:

SCALE: NONE SPEC. NO. NONE
DRAWING NUMBER △ DEF 812-30-01
SHEET 7 OF 8