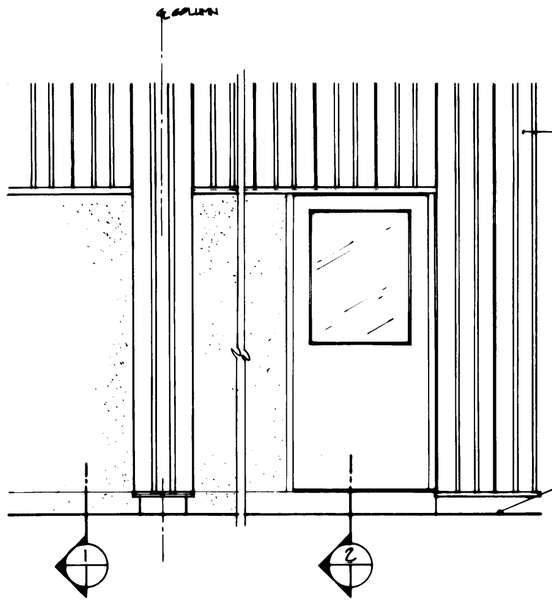

ELEVATION
SCALE 3/4" = 1'-0"

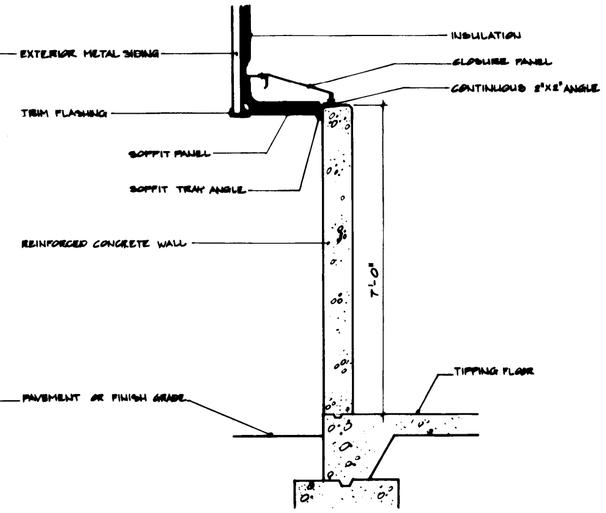

1 SECTION
SCALE 3/4" = 1'-0"

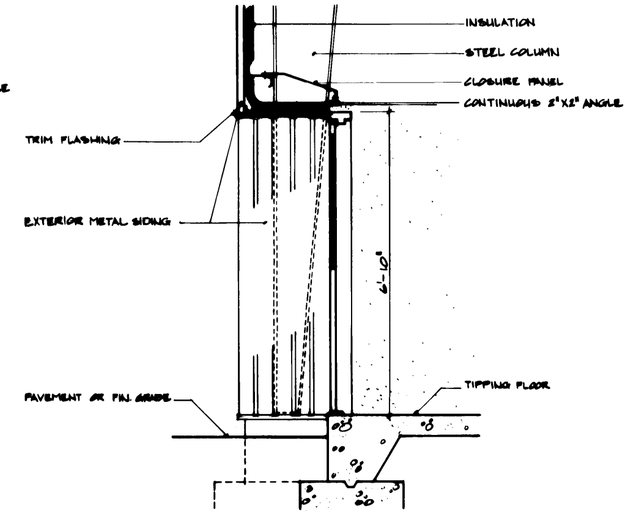

2 SECTION
SCALE 3/4" = 1'-0"

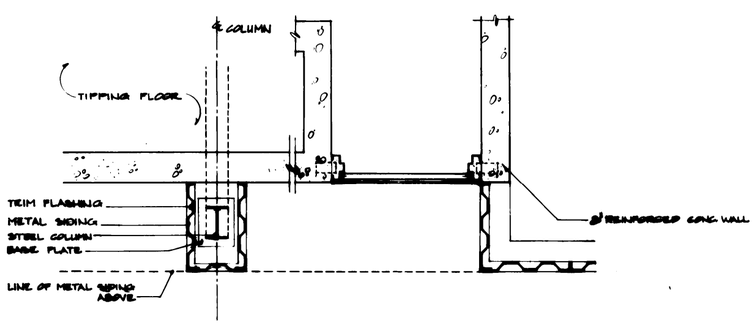

PLAN
SCALE 3/4" = 1'-0"

REV.	DATE	DESCRIPTION	BY	APP.

DEPARTMENT OF THE ARMY
NORFOLK DISTRICT, CORPS OF ENGINEERS
NORFOLK, VA.

DESIGNED: MAC/JA
DRAWN: JA
ENGINEER: MAC
SUPERVISOR: [illegible]

DEFINITIVE DESIGN
REFUSE-FIRED HEAT RECOVERY INCINERATOR
(MODULAR INCINERATORS - USE DEGS-11121)

TYPICAL DETAILS

SCALE:
TO ACCOMPANY SPECIFICATION NO.
PROJECT NO.
SHEET NO. 8 of 9
DATE MAY 1984
DRAWING NO. DEF 833-11-01

NORFOLK DISTRICT FILE NO.