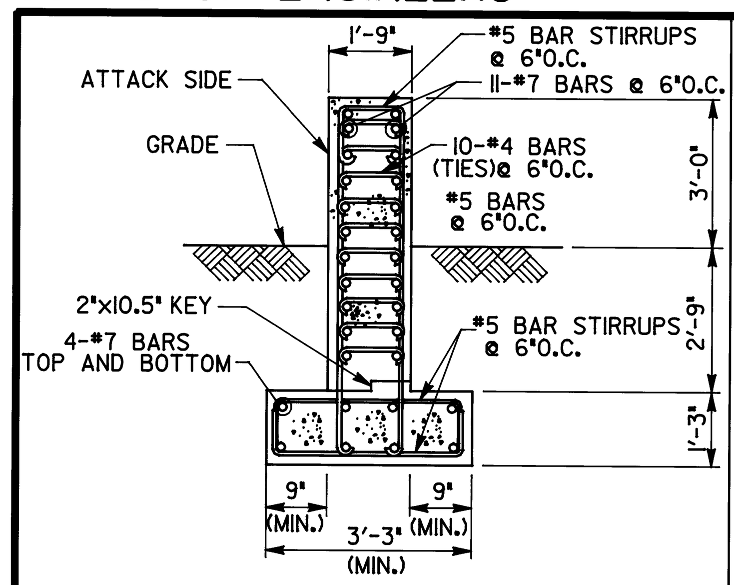

TYPE: HIGH VEHICLE THREAT RANGE

CONSTRUCTION: CAST-IN-PLACE HEAVILY REINFORCED CONCRETE RETAINING WALL WITH STIRRUPS

COST: $140/FT.

COMMENT: EFFECTIVE AGAINST AUTOMOBILES AND TRUCKS. BASE DIM.'S MUST BE CALCULATED BASED ON SOIL CONDITIONS AT THAT SITE.

PB-1 RETAINING WALL
SCALE: NONE

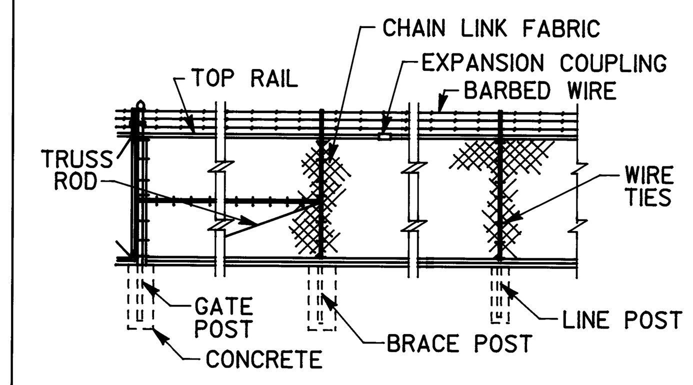

TYPE: NO STOPPING CAPABILITY

CONSTRUCTION: STANDARD CHAIN LINK FENCE WITH 3 STRANDS BARBED WIRE ON 45° EXTENSION ARMS.

COST: $12.00/FT.

COMMENT: USEFUL FOR DEFINING A BOUNDARY

PB-2 CHAIN LINK FENCE
SCALE: NONE

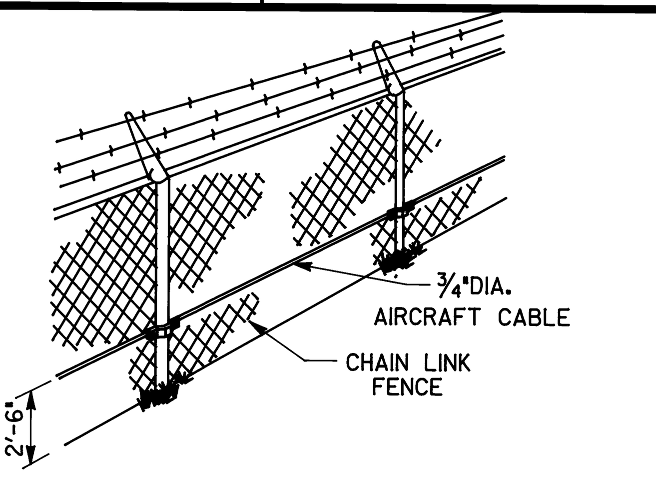

TYPE: MEDIUM VEHICLE THREAT RANGE

CONSTRUCTION: STANDARD CHAIN LINK FENCE ENHANCED WITH A 3/4" DIA OR LARGER AIRCRAFT CABLE IN FRONT OF THE FENCE POSTS.

COST: $17.00/FT.

COMMENT: NONE

PB-3 REINFORCED FENCE
SCALE: NONE

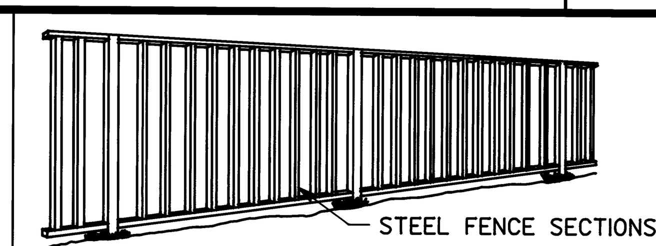

TYPE: NOT TESTED

CONSTRUCTION: STEEL SECTIONS BOLTED TO STEEL POSTS SET IN CONCRETE FOOTING.

COST: $44.00/FT.

COMMENT: COST AND EFFECTIVENESS VARIES CONSIDERABLY WITH FENCE DESIGN.

PB-4 STEEL FENCE
SCALE: NONE

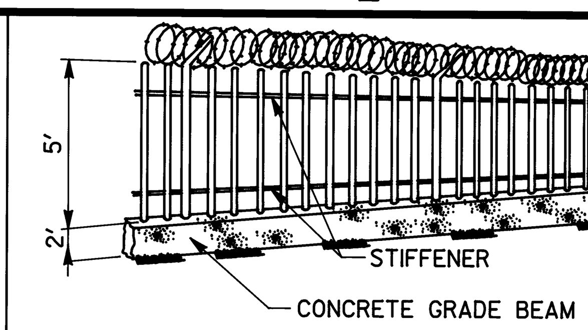

TYPE: NOT TESTED

CONSTRUCTION: CONCRETE FOOTING EXTENDING 2 FT. ABOVE GRADE, IMPROVED STEEL FENCE.

COST: $111.00/FT.

COMMENT: NONE

PB-5 REINFORCED FENCE
SCALE: 1/4"=1'-0"

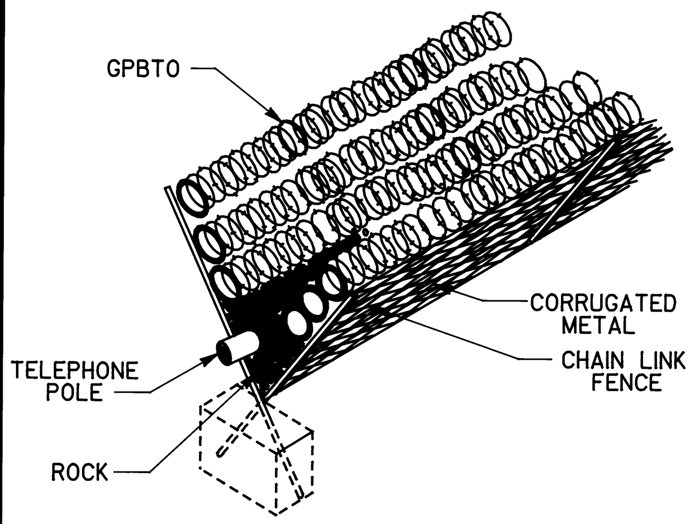

TYPE: NOT TESTED

CONSTRUCTION: DUAL CHAIN LINK FENCE SET AT 60° ANGLES TO FORM A "V", CORRUGATED SHEET METAL FORMS A "V" TROUGH 30" ABOVEGROUND & 12" BELOW GROUND, TROUGH FILLED WITH 2"-5" ROCK, TELEPHONE POLE & GPBTO.

COST: $71.00/FT.

COMMENT: EFFECTIVE AGAINST VEHICLES & PERSONNEL.

PB-6 V FENCE
SCALE: NONE

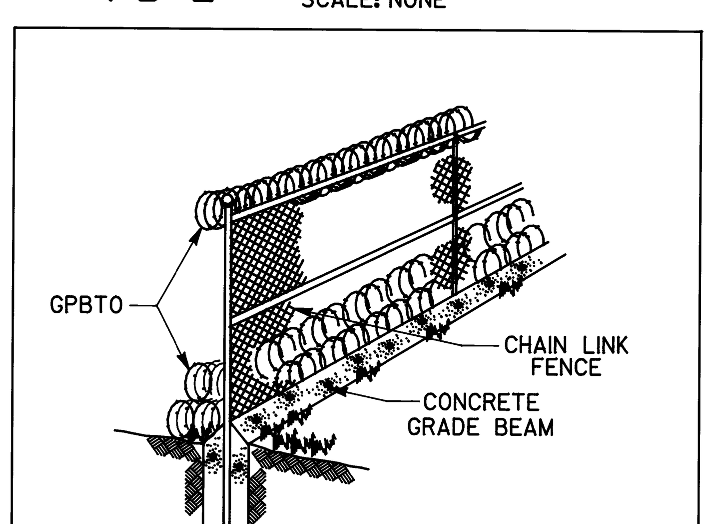

TYPE: NOT TESTED

CONSTRUCTION: STANDARD CHAIN LINK FENCING MAY BE ENHANCED WITH CABLE REINFORCING, CONCRETE GRADE BEAM BASE AND BARBED TAPE OBSTACLE.

COST: $66.50/FT.

COMMENT: NONE

PB-7 ENHANCED FENCE
SCALE: NONE

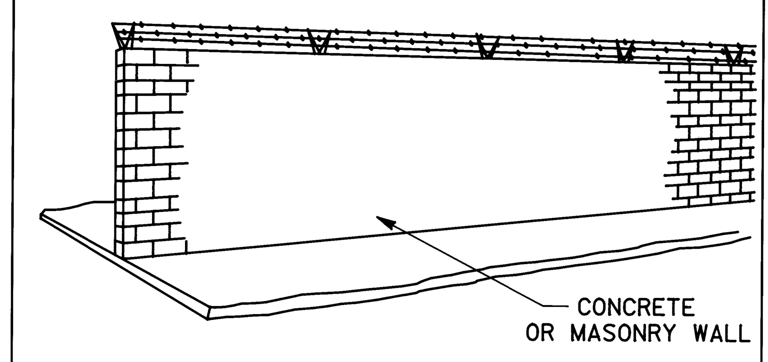

TYPE: NOT TESTED

CONSTRUCTION: CONCRETE OR MASONRY WALLS; RESULTS VARY WITH DESIGN.

COST FOR 12" REINFORCED CONCRETE WALL 6 FT. HIGH: $157.50/FT.

COMMENT: ALSO PROVIDES VISUAL SCREENING.

PB-8 MASONRY/CONCRETE WALL
SCALE: NONE

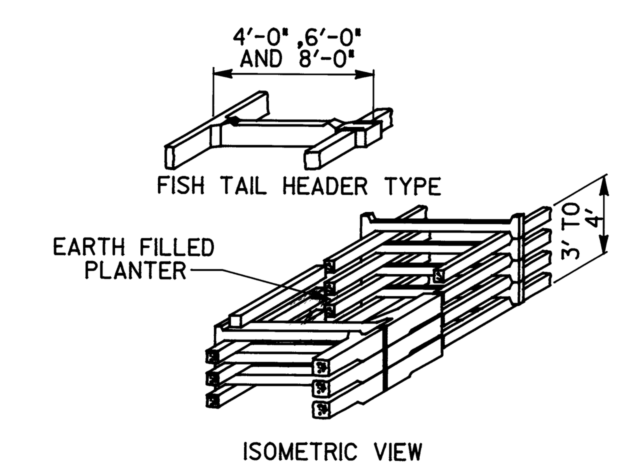

TYPE: NOT TESTED

CONSTRUCTION: PRECAST CONCRETE SECTIONS AS SHOWN OR CAST-IN-PLACE CONCRETE WALLS.

COST: $203/FT.

COMMENT: PRESENTS PLEASING APPEARANCE. SELECT PLANT MATERIAL WITH CARE TO AVOID OBSTRUCTING VIEWS OF ONCOMING VEHICLES.

PB-9 PLANTERS
SCALE: NONE

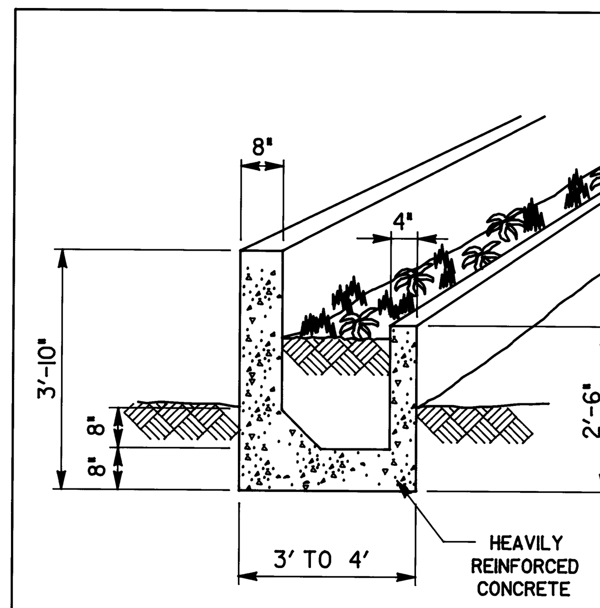

TYPE: HIGH VEHICLE THREAT RANGE

CONSTRUCTION: PRECAST OR CAST-IN-PLACE HEAVILY REINFORCED CONCRETE PLANTERS, MIN. 6 FT. LONG SECTIONS.

COST: $69.50/FT.

COMMENT: PRESENTS PLEASING APPEARANCE. SELECT PLANT MATERIAL WITH CARE TO AVOID OBSTRUCTING VIEWS OF ONCOMING VEHICLES.

PB-10 PLANTERS
SCALE: NONE

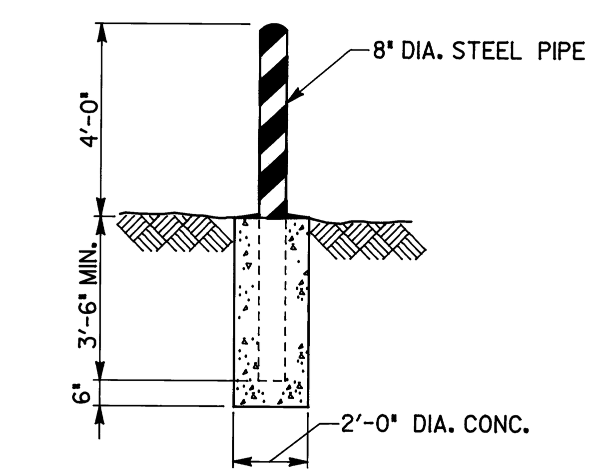

TYPE: MEDIUM VEHICLE THREAT RANGE

CONSTRUCTION: 8" DIA. STEEL PIPE FILLED WITH CONCRETE SET IN CONCRETE FOOTING, LOCATED 3 FT. ON CENTER.

COST $142.50/FT.

COMMENT: MAY BE MADE REMOVABLE. A STRETCHED STEEL CABLE RUNNING THRU THESE POSTS MAY BE USED TO EXCLUDE MOTORCYCLES.

PB-11 GUARD POST
SCALE: 3/8"=1'-0"

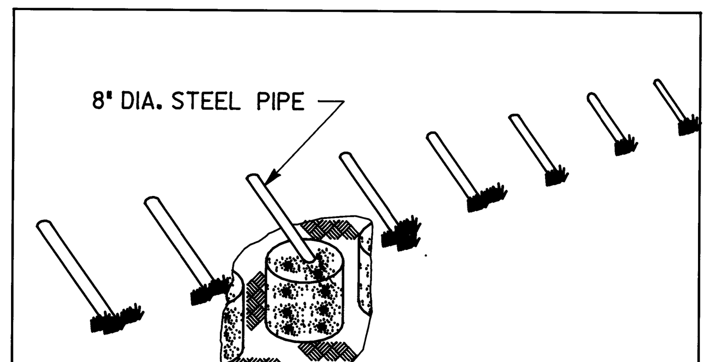

NOTE: PROTECTION AGAINST MOTORCYCLES MAY BE GAINED BY THREADING A HIGH STRENGTH STEEL CABLE THROUGH EACH STEEL PIPE.

TYPE: MEDIUM VEHICLE THREAT RANGE

CONSTRUCTION: 8" DIA. STEEL PIPE FILLED WITH CONCRETE OR RAILROAD RAILS, ANGLED AT 30° TO 45°, SET IN CONCRETE FOOTING, 3 TO 6 FT. ON CENTER.

COST: $142.50/FT. ON 3'-0" CENTERS

COMMENT: EFFECTIVE AGAINST AUTOMOBILES AND TRUCKS; INEFFECTIVE AGAINST MOTORCYCLES UNLESS CABLE IS ADDED.

PB-12 ANGLED POSTS
SCALE: NONE

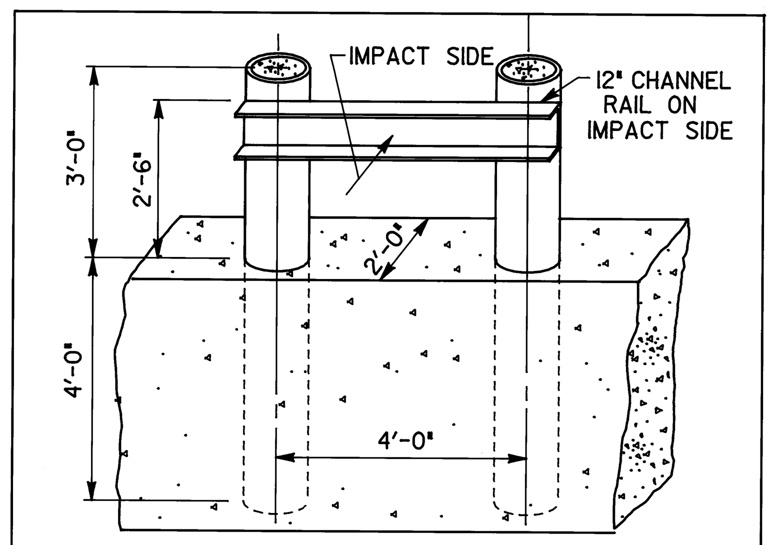

TYPE: HIGH VEHICLE THREAT RANGE

CONSTRUCTION: MIN. 8" DIA., 1/2" THICK WALL, STEEL PIPE FILLED WITH CONCRETE, EMEDDED IN CONCRETE FOOTING 3 TIMES PIPE DIAMETER IN WIDTH BY 4 FT. DEEP.

COST: $235.50/FT.

COMMENT: NONE

PB-13 REINFORCED BOLLARDS
SCALE: 1/2"=1'-0"

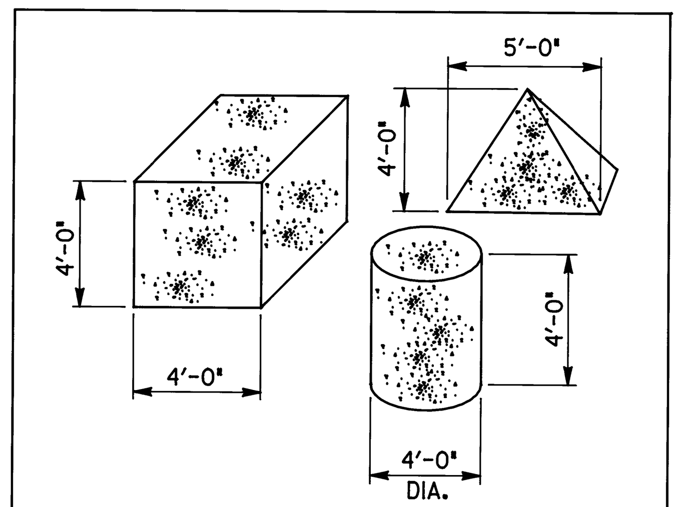

TYPE: NOT TESTED

CONSTRUCTION: PRECAST OR CAST-IN-PLACE CONCRETE SHAPES, ANCHOR TO GROUND.

COST ON 8 FT. CENTERS: $59.00/FT

COMMENT: USE A STEEL CABLE BETWEEN SHAPES TO EXCLUDE MOTORCYCLES.

PB-14 CONCRETE BLOCKS
SCALE: 1/4"=1'-0"

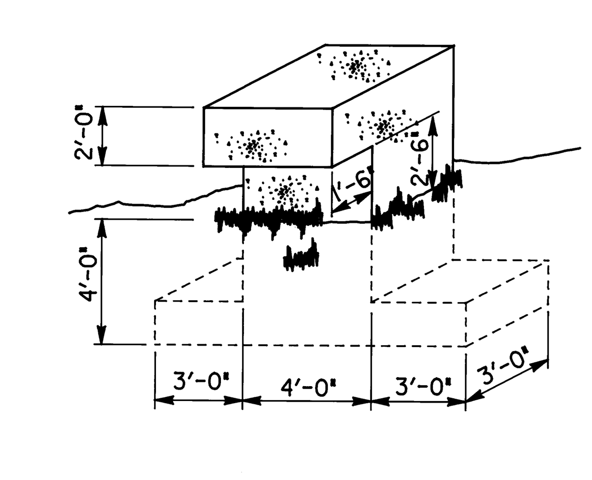

TYPE: NOT TESTED

CONSTRUCTION: PRECAST OR CAST-IN PLACE CONCRETE SHAPES SET 8 TO 10 FT. ON CENTER.

COST ON 8 FT. CENTERS: $304.00/FT.

COMMENT: EXTENDED LIP WILL CATCH THE FRONT END OF THE VEHICLE AND CRUSH ITS GRILL, RADIATOR & HOOD. USE A STEEL CABLE BETWEEN TEETH TO EXCLUDE MOTORCYCLES.

PB-15 DRAGON'S TEETH
SCALE: 1/4"=1'-0"

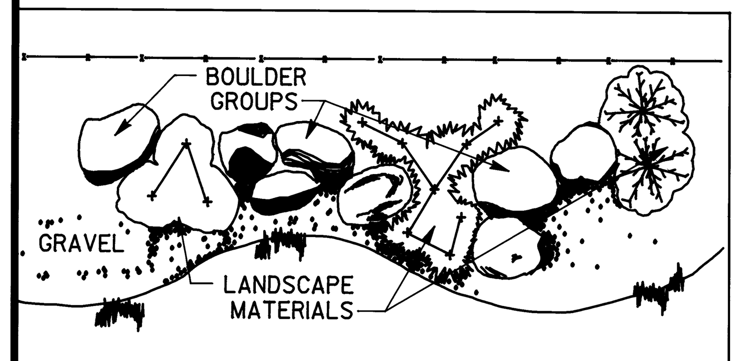

TYPE: MASS ALONE IS EFFECTIVE AGAINST HIGH VEHICLE THREAT.

CONSTRUCTION: FIVE TONS GROUPINGS OF LARGE BOULDERS, MINIMUM OF 2 1/2 TONS, SOME PARTIALLY BURIED IN GROUND, GROUPS NOT MORE THAN 4 FT. APART.

COST: $15 TO $45/FT. DEPENDING ON SOURCE OF BOULDERS

COMMENT: COST EFFECTIVE IF NATURAL MATERIAL IS READILY AVAILABLE.

PB-16 BOULDERS
SCALE: NONE

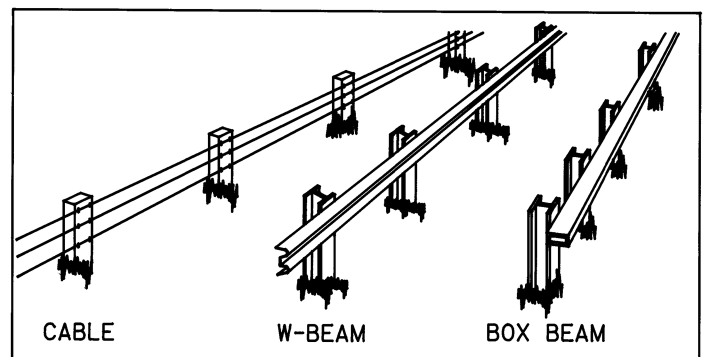

TYPE: NOT TESTED

CONSTRUCTION: 3-3/4" DIA. STEEL CABLES @ 3"O.C. ON POSTS SET ON 16 FT. CENTERS, 27" HIGH; CORRUGATED W BEAM ON POSTS SET ON 12.5 FT. CENTERS, 27" TO 30" HIGH; 6x6 OR 6x8 STEEL TUBE ON POSTS SET 4 FT. TO 6 FT. APART; 27" HIGH.

COST: $13.00, $12.50 AND $41.50

COMMENT: NOT DESIGNED TO PREVENT HEAD-ON PENETRATION; WILL IMMOBILIZE A LIGHTWEIGHT VEHICLE ATTEMPTING INTRUSION.

PB-17 GUARD RAILS
SCALE: NONE

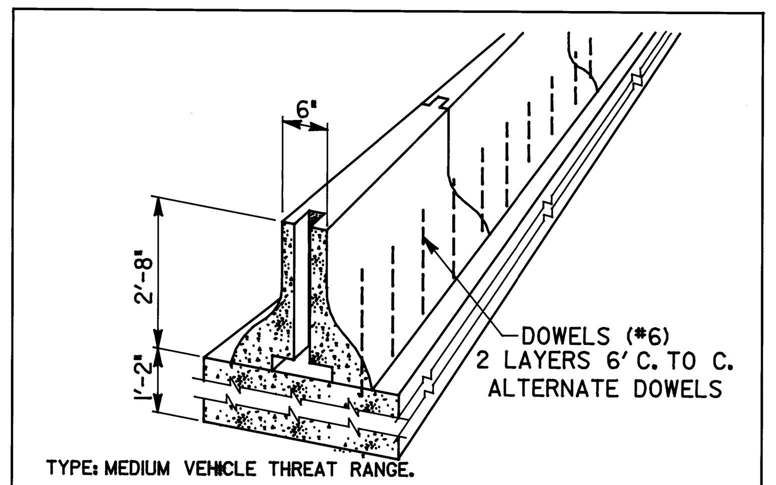

TYPE: MEDIUM VEHICLE THREAT RANGE.

CONSTRUCTION: PRECAST TOUNGE & GROOVE SECTIONS OR CAST-IN-PLACE USING SPECIAL CONCRETE FORMING EQUIPMENT.

COST: $32.00/FT.

COMMENT: EFFECTIVE AGAINST A 3/4TON TRUCK TRAVELING AT 50 MPH.

PB-18 NEW JERSEY BARRIER
SCALE: NONE

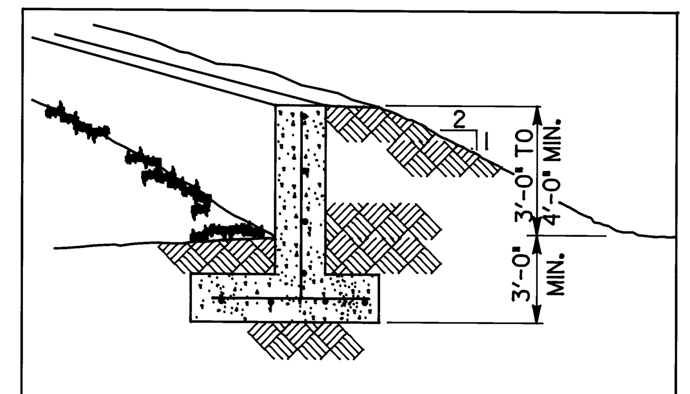

TYPE: NOT TESTED

CONSTRUCTION: CONCRETE RETAINING WALL BACKED UP WITH EARTH BERM, WALL FACES THREAT.

COST: $128.00/FT.

COMMENT: NONE

PB-19 BERM
SCALE: 1/4"=1'-0"

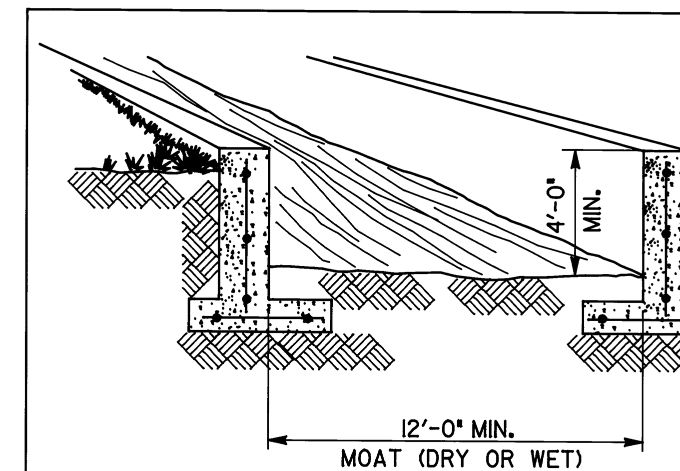

TYPE: NOT TESTED

CONSTRUCTION: CONCRETE RETAINING WALLS FORMING A MOAT.

COST: $258.50/FT.

COMMENT: MAY ALSO BE USED FOR ROAD DRAINAGE.

PB-20 MOAT/DRAINAGE CHANNEL
SCALE: 1/4"=1'-0"

PASSIVE BARRIERS

REFERENCE MATERIAL

U.S. ARMY CORPS OF ENGINEERS
SECURITY ENGINEERING MANUAL

USN, MIL-HDBK-1013/1
DESIGN GUIDELINES FOR PHYSICAL SECURITY OF FIXED LAND BASED FACILITIES.

DEPT.OF STATE, D.O.S.,SD-SDT-02.01

U.S. NAVY,TERRORIST VEHICLE BOMB SURVIVABILITY MANUAL (VEHICLE BARRIERS)

RELATED DRAWINGS

40-16-08 DRAWING, FENCES AND DETAILS

DEF 872-10-01 DRAWING, WEAPONS STORAGE AREA, FENCE DETAILS AND CRASH BEAM

VEHICLE BARRIER

VEHICLE BARRIERS MAY BE CATEGORIZED AS PASSIVE OR ACTIVE BARRIERS. A BARRIER IS PASSIVE IF ITS EFFECTIVENESS RELIES ON ITS BULK, MASS, OR POSITION. PASSIVE BARRIERS HAVE NO MOVING PARTS. A BARRIER IS ACTIVE IF IT REQUIRES ACTION BY PERSONNEL OR EQUIPMENT TO PERMIT ENTRY. ACTIVE BARRIERS ARE THOSE DEVICES USED TO CONTROL ACCESS THROUGH A GATE OR ENTRANCE. PASSIVE BARRIERS ARE USED TO CHANNEL THE FLOW OF TRAFFIC TO PREVENT VEHICLES FROM TAKING AN UNACCEPTABLE RATE OF ENTRY POINTS.

RATING OF PASSIVE/ACTIVE VEHICLE BARRIERS

THE SECURITY ENGINEERING MANUAL HAS SET UP THREE RANGES OF IMPACT CONDITIONS BASED ON A RANGE OF SPEED FOR THREE DIFFERENTLY SIZED VEHICLES. THESE RANGES ARE:

	GROSS VEHICLE WEIGHT (GVW) (LBS.)	IMPACT SPEED (MPH)	KINETIC ENERGY (1,000 FT.-LBS.)
HIGH	12,000	20-55	160.5-1,213
MEDIUM	5,000	20-55	66.88-505
LOW	4,000	20-55	53.5-404

SELECTION OF PASSIVE BARRIERS

IN THESE CONCEPTS, BARRIERS SUCH AS GUARD POSTS (BOTH VERTICAL AND ANGLED), BOLLARDS, CONCRETE SHAPES SET IN STRATEGIC LOCATIONS, DITCHES OR MOATS, CONCRETE WALLS, EARTH-FILLED BARRIERS, AND THE NEW JERSEY HIGHWAY BARRIERS HAVE BEEN ENVISIONED. HOWEVER, SPECIFIC PASSIVE BARRIERS HAVE NOT BEEN IDENTIFIED. THE SELECTION OF A SPECIFIC BARRIER IS LEFT TO THE LOCAL SECURITY PLANNERS. SELECT BARRIERS BASED ON THE THREAT IDENTIFIED, THE TERRAIN ENCOUNTERED, THE VISUAL APPEARANCE DESIRED, AND THE BUDGET FOR THE BARRIERS. ALSO CONSIDER MAINTENANCE COSTS INCLUDING THE REMOVAL OF PLANT GROWTH, TRASH AND SNOW; REPAIR OR REPLACEMENT COSTS WHEN THE BARRIER IS BREACHED; THE EASE OF RELOCATING THE BARRIER; AND THE HAZARD PRESENTED TO INNOCENT PERSONNEL WHO MAY ACCIDENTALLY STRIKE THE BARRIER.

ADDITIONAL NOTES

APPEARANCE SHALL BE A MAJOR CONSIDERATION WHEN SELECTING PASSIVE BARRIERS.

THE INSTALLATION OF BARRIERS AROUND A SITE WILL NOT PREVENT PENETRATION OF THE SITE BY UNAUTHORIZED PERSONNEL. GIVEN TIME, ANY OF THESE BARRIERS MAY BE PENETRATED. THE BARRIERS DO PREVENT EASY MOBILE ACCESS FROM BOTH OUTSIDE AND INSIDE, DO DELAY BREACHING, AND DO DEMONSTRATE AN ADVERSARY'S INTENT. PLACING BARRIERS NEAR THE OUTSIDE ERIMETER FORCES THE ADVERSARY TO HAND CARRY HIS WEAPON TO HIS TARGET.

THESE PASSIVE BARRIERS ARE TO BE USED AT THE MAIN ENTRY POINTS. MANY WILL NOT EXCLUDE PERSONNEL ON FOOT OR ON MOTORCYCLES. IF THESE BARRIERS ARE UNDER THE OBSERVATION OF GUATD PERSONNEL, PROTECTION AGAINST MOTORCYCLES AND PEDESTRIANS MAY NOT BE NECESSARY. OTHERWISE THOSE BARRIERS SHOULD BE SUPPLEMENTED TO EXCLUDE THESE THREATS.

IN ADDITION TO THE PROBLEMS OF PLANT GROWTH, WINDBLOWN TRASH, AND SNOW, DETECTION SENSOR LOCATIONS AND VIDEO ASSESSMENT POSITIONS MUST BE CONSIDERED WHEN ADDING PASSIVE BARRIERS TO A SITE. ALSO PASSIVE BARRIERS MAY BE USED BY AN ADVERSARY FOR FIRING POSITIONS OR CONCEALMENT.

GROWTH CHARACTERISTICS OF PLANTS USED IN PLANTERS MUST BE CONSIDERED TO AVOID OBSTRUCTING THE GUARDS VIEWS OF ONCOMING TRAFFIC.

PRICING NOTES

PRICES ARE BUDGET PRICES AS PER AR 415-17 USING 1988 PRICES AND LIST PRICE QUOTES FROM MANUFACTURERS. PRICES FOR PASSIVE BARRIERS ARE GENERALLY PER FOOT OF BARRIER. THE PRICES INCLUDE AN ALLOWANCE FOR FOUNDATIONS AND INSTALLATION.

E D C B A

Symbol	Description	Date	Approved
△	GENERAL REVISIONS. SHEET REDRAWN.	27Feb89	AF

Revisions

U.S. ARMY ENGINEER DIVISION, HUNTSVILLE
CORPS OF ENGINEERS
HUNTSVILLE, ALABAMA

Site adapt A/E :

US Army Corps of Engineers

ENTRY POINTS FOR U.S. ARMY INSTALLATIONS

PASSIVE BARRIERS

Dwn. by : RDP | Ckd. by : AF

Reviewed by : [signature]

Approved by : [signature]

Date : 27 FEB 89

Drawing code : DEF 872-50-01

Sheet reference number : 9

Design file no.:

Rev. 1

Sheet 9 of 14