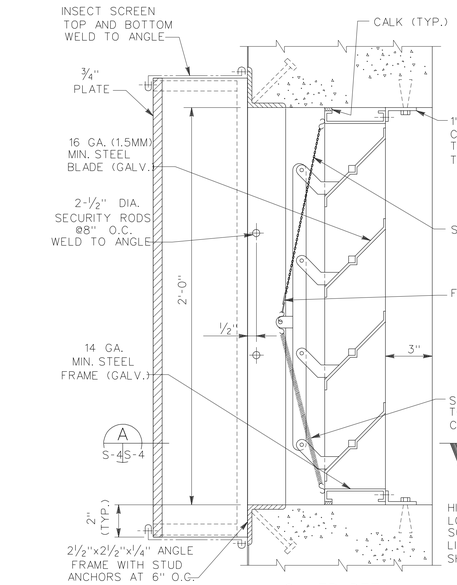

LOUVER DETAIL
SCALE 3"=1'-0"

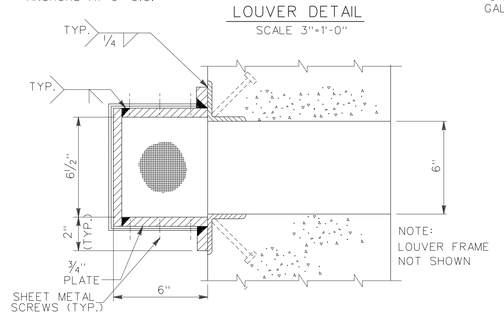

SECTION A
SCALE 3"=1'-0" S-4 S-4

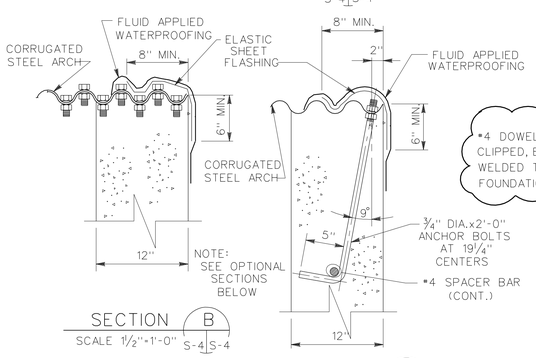

SECTION B
SCALE 1 1/2"=1'-0" S-4 S-4

SECTION A
SCALE 1 1/2"=1'-0" S-4 S-4

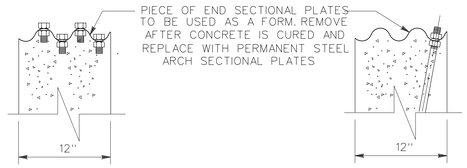

OPTIONAL SECTION B
SCALE 1 1/2"=1'-0" S-4 S-4

OPTIONAL SECTION A
SCALE 1 1/2"=1'-0" S-4 S-4

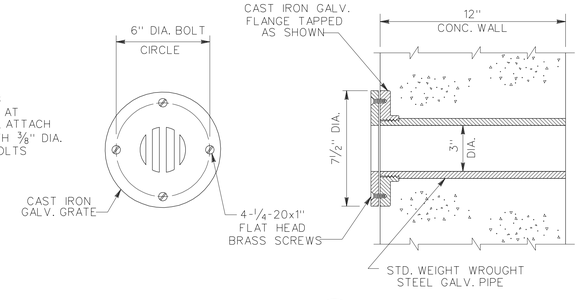

DETAIL 5
SCALE 3"=1'-0" S-2 S-4

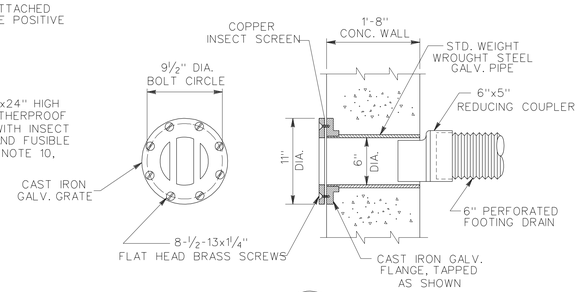

DETAIL 6
SCALE 1 1/2"=1'-0" S-2 S-4

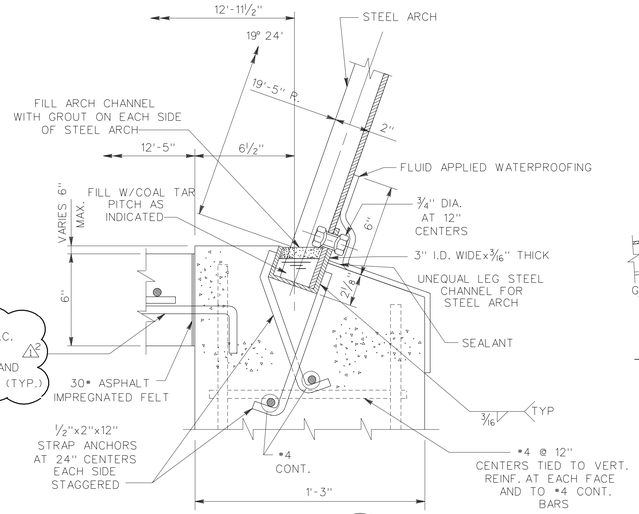

DETAIL 1
SCALE 3"=1'-0" S-1 S-4

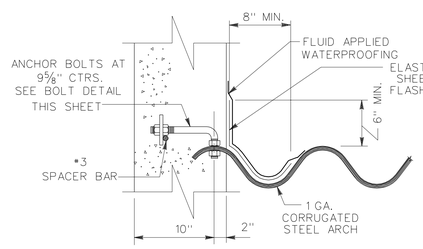

DETAIL 2
SCALE 1 1/2"=1'-0" S-1 S-4
S-2
S-3

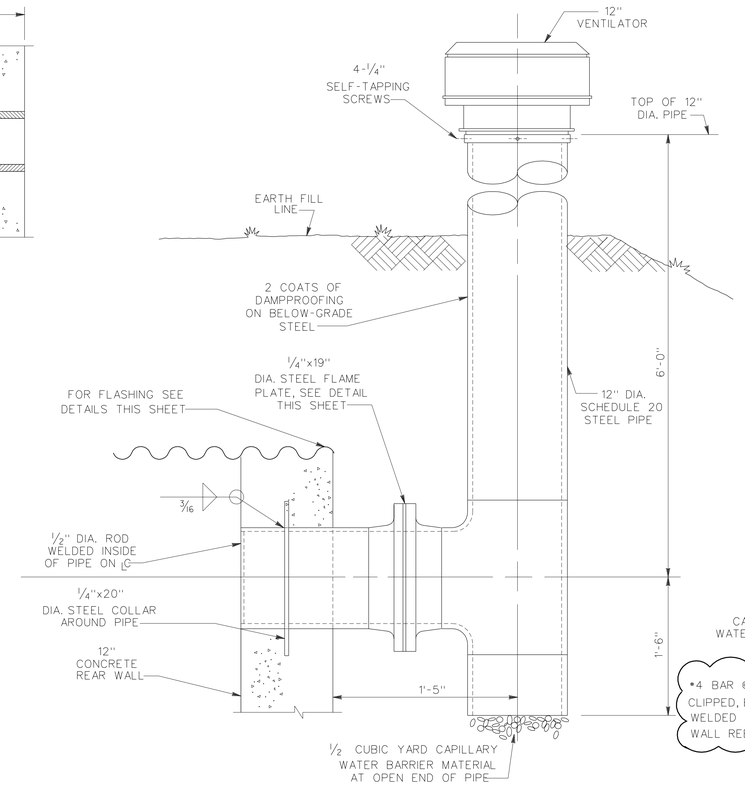

VENTILATOR DETAIL 4
SCALE 1 1/2"=1'-0" S-1 S-4

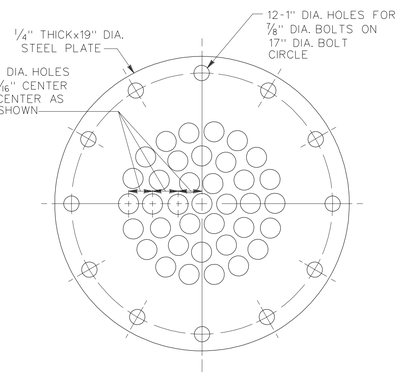

VENTILATOR FLAME PLATE DETAIL
SCALE 3"=1'-0"

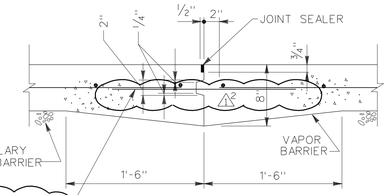

FLOOR CONSTRUCTION JOINT
(STEEL TO BE DIS-CONTINUOUS)

SECTION P
SCALE: 1 1/2"=1'-0" S-1 S-4

#4 BAR @ 5'-0" O.C. CLIPPED, BRAZED OR WELDED TO FLOOR AND WALL REBAR (TYP.)

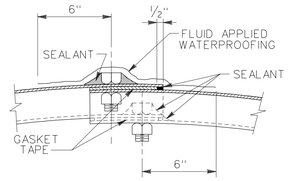

TYPICAL SPLICE DETAIL
NO SCALE

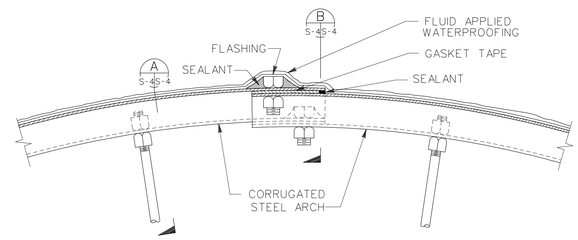

DETAIL 3
NO SCALE S-1 S-4

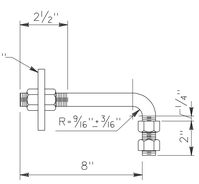

BOLT DETAIL
SCALE 3"=1'-0"

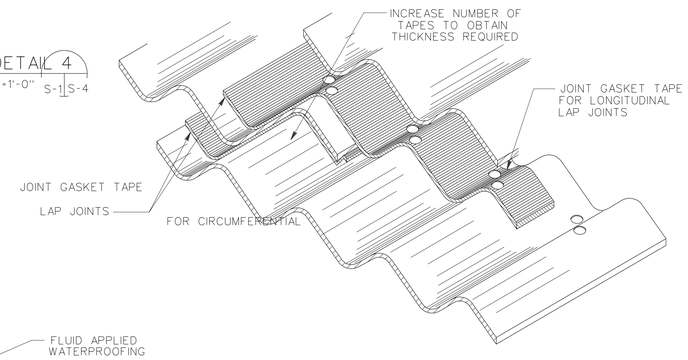

JOINT TAPE INTALLATION DETAIL
NO SCALE

GRAPHIC SCALES:

3" = 1'-0" 1" 0 1" 2" 3" 4" 5" 6" 7" 8" 9" 10" 11"

1 1/2" = 1'-0" 12" 9" 6" 3" 0 1'

Symbol	Description	Date	Approved
1	GENERAL REVISION FOR LIGHTNING PROTECTIION	11JUN98	WAW

Revisions

U.S. ARMY ENGINEER DIVISION, HUNTSVILLE
CORPS OF ENGINEERS
HUNTSVILLE, ALABAMA

Site adapt A/E :

US Army Corps of Engineers

MAGAZINE, STEEL OVAL-ARCH, EARTH COVERED

MISCELLANEOUS DETAILS

Dwn. by: RDP | Ckd. by: AF

Reviewed by :

Approved by :

Date : 30 OCT 92

Drawing code : STD 421-80-03

Sheet reference number : S-4

Design file no.: 65859

Rev.

Sheet 5 of 10

4218003.DGN

THIS DRAWING SUPERSEDES STD 33-15-73