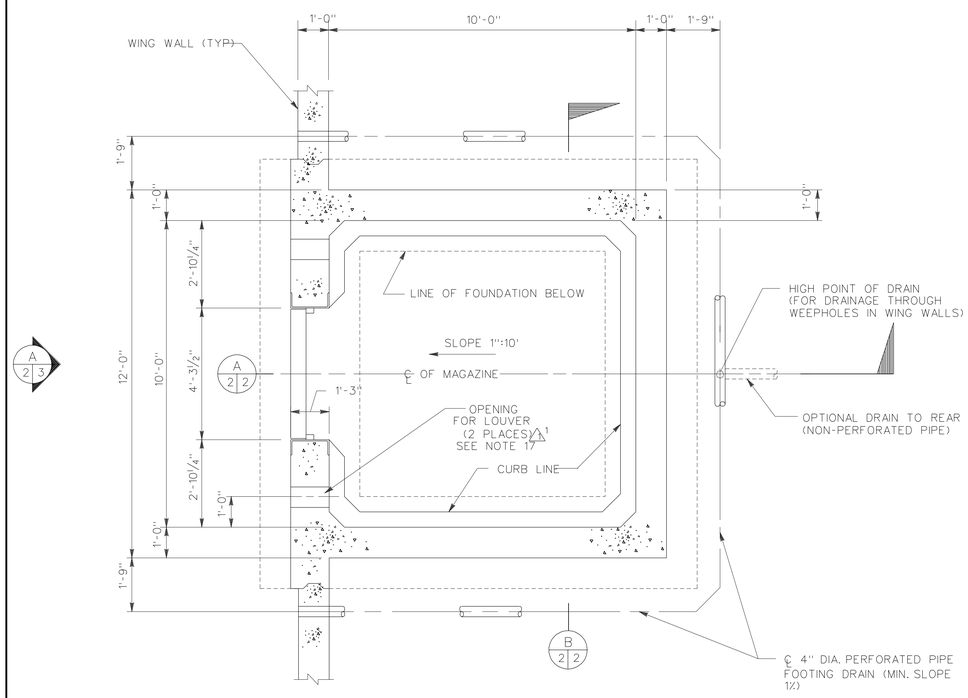

PLAN

SCALE: 1/2" = 1'-0"

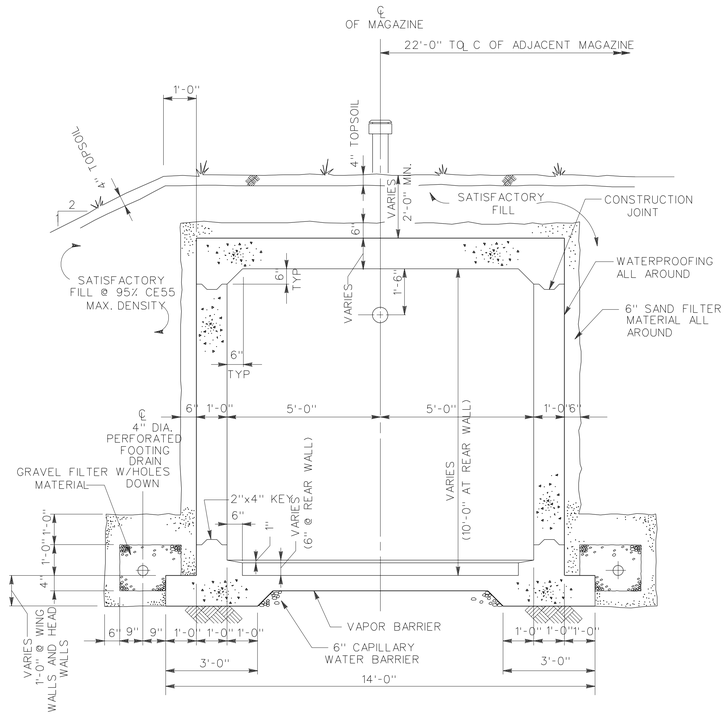

SECTION B 2 2

SCALE: 1/2" = 1'-0"

GENERAL NOTES:

1. CONCRETE SHALL HAVE A MINIMUM COMPRESSIVE STRENGTH OF 4,000 PSI AT 28 DAYS, EXCEPT AS NOTED BELOW.
2. CONCRETE PAVEMENT SHALL HAVE A MINIMUM ULTIMATE FLEXURAL STRENGTH OF 600 PSI AT 28 DAYS.
3. REINFORCING STEEL SHALL BE GRADE 60, MEETING ASTM A615.
4. REINFORCING STEEL AND ALL METAL SHALL BE MADE ELECTRICALLY CONTINUOUS BY TYING, OR CLIPPING.
5. ALL CONCRETE EXPOSED CORNERS AND EDGES SHALL BE CHAMFERED 1"x1".
6. FLOOR SHALL BE TROWELLED SMOOTH AND SURFACE HARDENER APPLIED.
7. DRAINS TO BE SITE ADAPTED TO DRAIN EITHER TO THE FRONT OR REAR OF THE MAGAZINE. INAPPLICABLE DETAILS AND NOTES WILL BE DELETED FROM THE DRAWINGS BY THE SITE-ADAPT DESIGNER.
8. EARTH FILL SHALL CONTAIN NO STONES HEAVIER THAN 10 POUNDS OR LARGER THAN 6" IN ANY DIMENSION.
9. EARTH FILL ON SIDES AND END OF MAGAZINE SHALL BE PLACED SIMULTANEOUSLY.
10. EARTH COVER SHALL BE PLACED IN SUCH A MANNER TO AVOID DAMAGE TO THE WATERPROOFING.
11. IN FROST AREAS PROVIDE NONFROST-SUSCEPTIBLE MATERIAL UNDER HEADWALL FOOTING TO FULL DEPTH OF FROST PENETRATION OR FOOTING DEPTH WILL BE INCREASED TO BELOW FROST DEPTH.
12. LAP SPLICE NOT INDICATED ON DRAWINGS SHALL BE 40 BAR DIAMETER OR 24" WHICHEVER IS GREATER.
13. CONTRACTOR SHALL SUBMIT SIGN FOR APPROVAL. SIGN SHALL BE ⅛" THICK STEEL SHEET SECURED TO HEADWALL WITH 6-⅜" DIA. EXPANSION ANCHORS. LETTERS SHALL BE BLACK 4" HIGH AND 1" THICK ON YELLOW BACKGROUND.
14. EARTH FILL MARKERS SHALL BE PAINTED AS DETAILED. LINES SHALL BE 1-INCH THICK COLOR BLACK. LETTERS AND NUMBERS SHALL BE YELLOW AND APPROPRIATELY SIZED. SUBMIT FOR CONTRACTING OFFICER APPROVAL.
15. THE INVERTED KEY JOINT SHALL BE MAINTAINED WHERE SHOWN.
16. ALTERNATE DRAINAGE SYSTEM TO REPLACE THE TWO STAGE SAND/GRAVEL IS SHOWN ON SHEET 4. CONTRACTOR SHALL SUBMIT ALTERNATE FOR CONTRACTING OFFICER APPROVAL.
17. LOUVERS ARE OPTIONAL. THEIR NECESSITY AND SIZE SHALL BE DETERMINED, DURING THE SITE ADAPTION PROCESS BASED ON MATERIALS TO BE STORED AND GEOGRAPHICAL LOCATIONS. THE LOUVER WIDTH OF 6 INCHES SHALL BE MAINTAINED. THE HEIGHT MAY BE VARIED AS NECESSARY.

DESIGN CRITERIA:

NET EXPLOSIVE WEIGHT (NEW)	425 LBS
TNT EQUIVALENCY FACTOR	1.25
ROOF LIVE LOAD (TRACTORS OR MOWERS)	100 PSF
SOIL BEARING PRESSURE	2,500 PSF
SOIL DENSITY	110 PCF
ANGLE OF REPOSE (φ)	33°

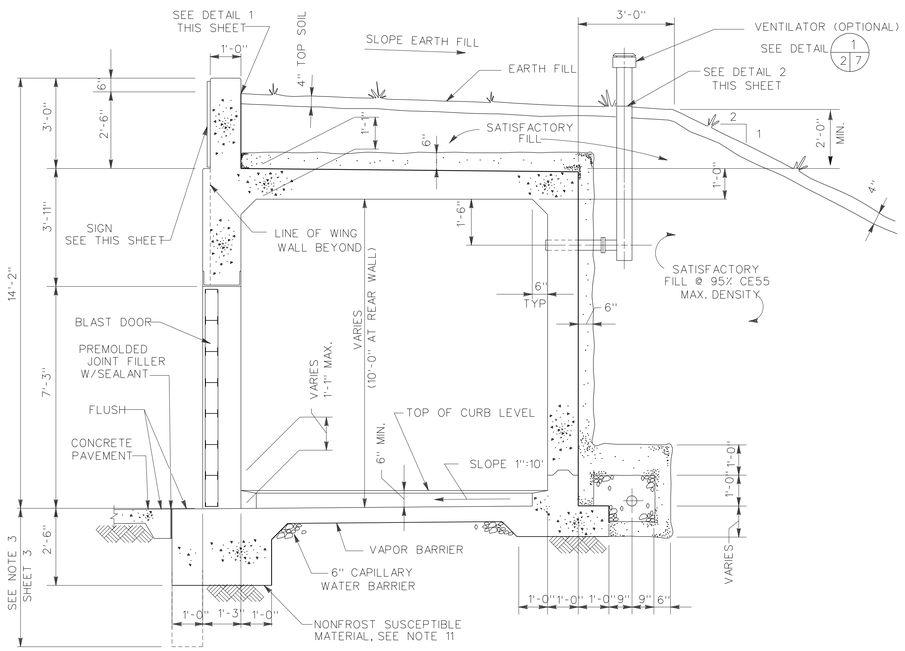

LONGITUDINAL SECTION A 2 2

SCALE: 1/2" = 1'-0"

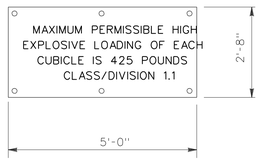

SIGN

(SEE NOTE 13)

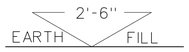

DETAIL 1

CENTER AT BACK OF HEADWALL

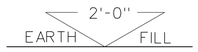

DETAIL 2

AROUND VENTILATOR PIPE

EARTH FILL DEPTH MARKERS

(SEE NOTE 14)

GRAPHIC SCALE

½" = 1'-0" 12 6 0 1' 2' 3' 4' 5'

Symbol	Description	Date	Approved
2	ADDED NOTE	3/30/90	

Revisions

U.S. ARMY ENGINEER DIVISION, HUNTSVILLE
CORPS OF ENGINEERS
HUNTSVILLE, ALABAMA

Site adapt A/E :

US Army Corps of Engineers

MAGAZINE, CONCRETE, CUBICLE, EARTH - COVERED
EARTH - COVERED
PLANS, SECTIONS AND GENERAL NOTES

Dwn. by : RDP | Ckd. by : AF

Reviewed by :

Approved by :

Date :

Drawing code : STD 422-15-01

Sheet reference number : 2

Design file no. : 20202

Rev.

Sheet 2 of 10